Simple Proportional

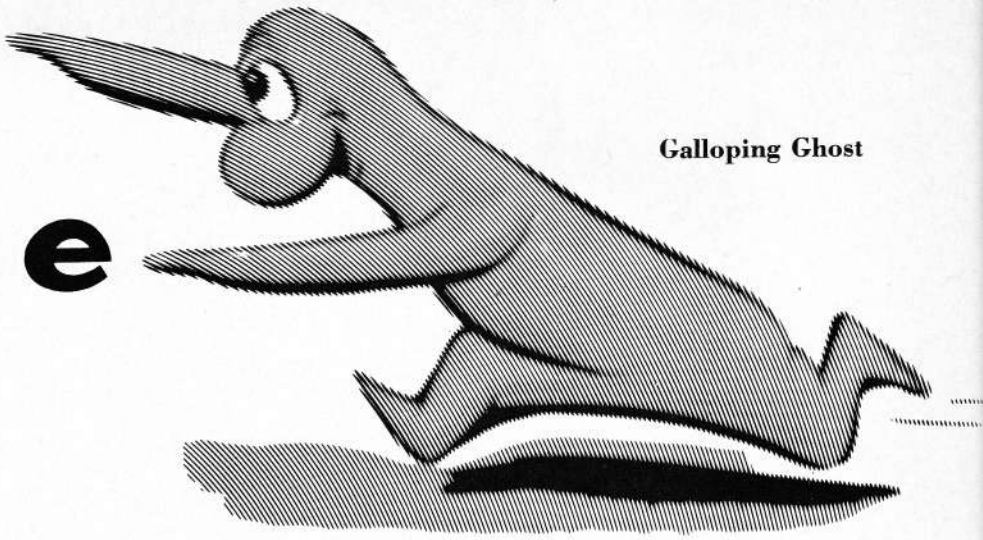

Part I of a series of articles on simplified proportional control for Class II.

With the tremendous, but expected, widespread sweep of interest in the new simultaneous proportional systems appearing on the market, there has been a corresponding increase in interest in single channel, Class II proportional systems. Commencing with this introductory article, RCM will present a series of features on various types of units, including an article by Ted Strader on Galloping Ghost; and RCM superhet conversion and refinement of the B & D system; and a complete article on the installation and flying of the Glass City Multiplex Master proportional system. As with all material presented in these pages, the emphasis will be on "flyability," rather than experimental and unproven systems. This, we feel, will provide the modeler who does not wish to spend several hundred dollars on one of the multi proportional systems, a variety of ideas on proportional control that can be put to practical use and still give many of the features of the more complex, and expensive, proportional rigs.

Proportional Rudder with Elevator

One of the simplest forms of proportional rudder is to utilize the very popular Mighty Midget motor as a pulse actuator. Adding "bang-bang" elevator to the same ship is a relatively simple process. The illustration from Chuck Cunningham, Forth Worth, Texas, shows this hook-up. No additional changes need to be made to your rudder-only pulser, as this operation requires only the full ON and full OFF buttons normally used for motor control. For elevator, full signal ON rotates the crankpin on the Mighty Midget until it hits the pin on the bellcrank, giving neutral rudder and full up elevator. (Or full down, depending upon how the fail-safe is set up — either lost signal or interference). This system can be blipped by the ON and OFF buttons exactly as in multi-control. The rudder stick can be held in a turn position and the elevator blipped. Between blips, the ruder will return to the signal position held at the stick. Add light springing to the elevator, as shown, to insure positive return to neutral.

Kickin' Duck

Although we are not at this time presenting a construction feature for the Kickin' Duck system, an excellent schematic by Ernie Reuther appeared in the NJRCC Printed Circuit, and is reprinted here with an explanation of

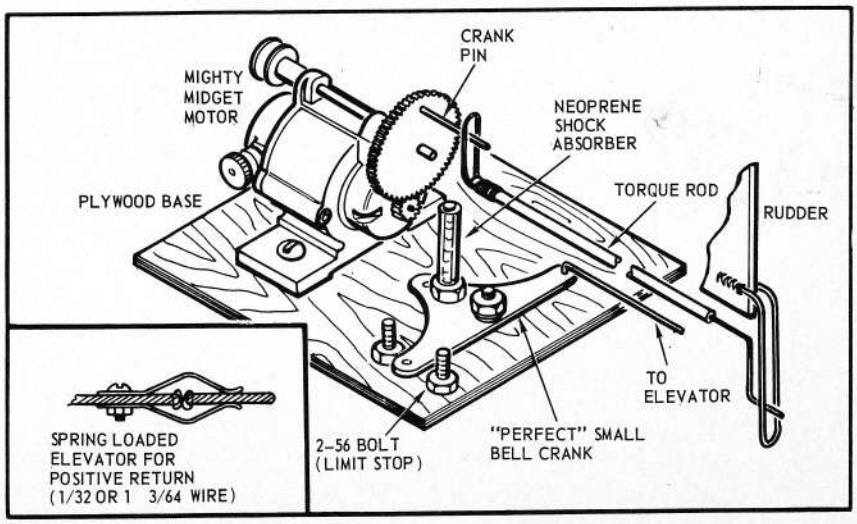

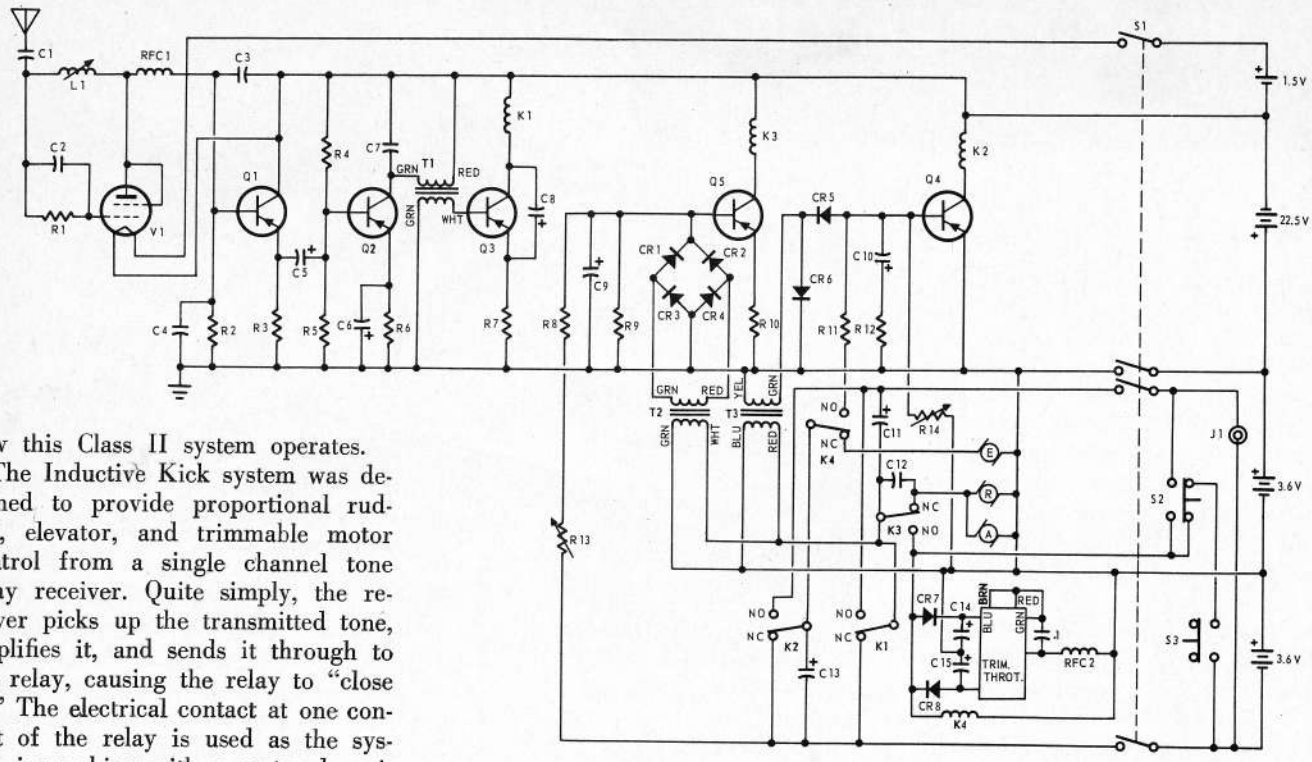

how this Class II system operates.

The Inductive Kick system was designed to provide proportional rudder, elevator, and trimmable motor control from a single channel tone relay receiver. Quite simply, the receiver picks up the transmitted tone, amplifies it, and sends it through to the relay, causing the relay to "close in." The electrical contact at one contact of the relay is used as the system is working with a centered position on the pulse box by putting them through a miniature transformer to get the inductive kick out of it, and utilize it, by amplification in a transistor circuit to operate another relay which controls the elevator servo.

With the pulse box stick in the neutral position, the elevator relay is pulsing equal amounts of ON and OFF signals to the Mighty Midget actuators. If the pulser stick is moved forward, increasing the speed or rate of pulses, through a transistor circuit, it causes the relay to stay closed longer than it remains open. The elevator servo then will drive the elevator to the down position. If the stick is pulled back, the pulses are slowed down and the elevator relay subsequently remains open more than closed, resulting in up elevator. The system itself, as explained, depends upon pulse rate and width variations to operate the rudder and elevator independently and simultaneously. The Mighty Midget actuators are basically the same as the ones used for rudder-only proportional control except that they have been reworked to some extent and have double gearing to provide smoother operation and additional power to the control surfaces.

The motor control is operated by a pulse omission detector (P.O.D.) using a multi servo such as the Annco 2R which provides trimmable throttle by momentarily ceasing the pulsed signals. All moving control surfaces go to neutral position when changing engine speeds.

The required pulser is equipped with two pushbuttons, one full ON which advances the throttle, and one full OFF which retards the throttle. The pulser to be described for Galloping Ghost systems can also be used for the Inductive Kick system.

The parts call-out for the Kickin' Duck circuit is as follows:

V1	1AG4 Raytheon tube
Transistors:	2N404 or 2N215 (selected)
Diodes:	IN645 (except D7-D8 power diodes)
RY1	5K (receiver)
RY2	5K (elevator)
RY3	5K (P.O.D.)
RY4	100 Ohm (elevator fail-safe)
R	MM rudder servo
E	MM elevator servo
A	MM aileron servo
TH	Annco 2R trimmable throttle servo
TR1	CR-60 transformer
TR2	CR-60 transformer
TR3	TR-98 transformer
S1	4PST slide switch
S2	SPDT momentary pushbutton
S3	SPST momentary pushbutton
C1	2.2 uf (NPO)
C2	47 uf (NPO)
C3	.001 mf
C4	.01 mf
C5	10 mf 25V electrolytic
C6	10 mf 25V electrolytic
C7	.01 mf
C8	1 mf 25V electrolytic
C9	20 mf 6V electrolytic
C10	100 mf 3V electrlytic
C11	100 mf 15 electrolytic
C12	.02 mf
C13	50 mf 15V electrolytic
C14	30 mf 15V electrolytic
C15	30 mf 15V electrolytic
R1	2.2 meg
R2	39K
R3	39K
R4	100K
R5	10K
R6	4.7K
R7	56 ohms
R8	3.9K
R9	15K
R10	110 ohms
R11	62K
R12	75K
R13	10K
R14	10K
J1	Charging Jack
RFC1	20 Micro Henrys
RFC2	24 Micro Henrys

Galloping Ghost

Galloping Ghost is, basically, a simple form of simultaneous dual proportional control. Again, pulse length is used for rudder and pulse rate for elevator. In this system, however, only one Mighty Midget, or other actuator, is used, with interconnected elevator and rudder, and with mechanical rather than electrical separation of control signals.

The photos illustrate the new Phelps, high-stability pulser to be

(Continued on page 42)

SIMPLE PROPORTIONAL

(Continued from page 23)

kitted by Ace Radio Control. This prototype was one of six sent to various individuals across the country for final checkout prior to kit production. It was designed by John Phelps to fill the demand for a reasonably priced ($28.95 in kit form) pulser capable of complete precision, and having immunity to drift with battery voltage by utilizing a unijunction transistor. The new high performance GE 2N2924 transistors are used in place of the original, and large, 2N-1694 units. Since high rate is possible by changing the value of the electrolytic capacitor, the pulser will provide the precise accurate encoding signal needed for both Galloping Ghost and Kickin' Duck systems to perform at an optimum level.

This pulser in this form is recommended for all so called single channel uses. This usage includes Kicking Duck, Galloping Ghost, etc. Since high rate is possible by changing the value of the electrolytic capacitor, the pulser will provide the precise accurate encoding signal needed for such systems to perform at an optimum level.

The pulser has a section that is responsible for the generation of the essential wave form, a rectangular wave whose duties cycle and repetition frequency are variable, independently, as control commands.

The first portion, a unijunction oscillator, furnishes a saw tooth beginning near ground and rising to approximately 12 volts. The frequency or period of the saw tooth is determined by the value of the timing capacitor, C, the intrinsic standoff ratio of the unijunction and the rate elevator stick pot setting. Since the period is defined by the relation among 3 variables, 2 of which are predetermined (unijunction transistor characteristics and timing capacitor tolerance) a trim provision of sufficient range is provided to absorb these variables.

The elevator stick pot is a standard 270 degree linear 50K ohm pot, and should be positioned on the stick assembly so that the moving wiper hits the pot stop with the stick all of the way forward. This position gives the greatest possible frequency change ratio (4:1) for the 80 degree stick travel. Less elevator control can be had (and a lower pulse frequency at center position) by rotating the pot away from this initial adjustment.

The two stage high gain squaring amplifier is a NPN PNP direct coupled pair. Both transistors are turned on and the PNP saturated by the one meg resistor in the plus 22 volt rail.

The stick pot in the emitter of the 2N2926 (a standard 10K linear taper 270 degree pot) sets a DC voltage which determines the voltage level at which the saw tooth turns off the squaring amplifier. The scheme of calling upon the saw tooth only for turn-off duty assures light saw tooth loading (22 micro ampers maximum) and assures a low control interaction and exceptional temperature stability. The result of squaring at various voltage levels, determined by the rudder stick pot, is a variable duty cycle square wave. Eighty degrees of stick travel changes the duty cycle from 80% to 20% off, to 20% on, and 80% off. The duty cycle should be set for 50% with the trim pot at center travel, and the stick straight up. An ohmmeter connected between the relay armature and either contact will read duty cycle directly as a mid-scale deflection (average) for 50% duty cycle.

Shielded cable with the outer shield connected to both transmitter chassis and the pulser box is necessary to prevent transmitter RF from creeping into the pulse box and raising hob. Transistor choice and component values team together to guarantee 10 degrees Fahrenheit to a 140 degrees Fahrenheit pulser operation. Weak dry batteries are readily exposed by low temperatures, so check by cold soaking the battery. Pulsers will stop at a level determined by relay spring tension.

Two additional items that will aid the Galloping Ghost fan to achieve a greater degree of reliability and air time, are the Go-Ac servo and GG control coupler from Special Editions Plans. The Go-Ac is a go-around type servo utilizing a Mighty Midget and spring-return worm gear that provides the normal GG functions plus trimmable throttle without the necessity for additional servos or circuitry. The control coupler is an accurately made linkage for Galloping Ghost which eliminates the four or five hours usually necessary to form the surface linkages.

With this basic information as an introduction to simple proportional, Part II by Ted Strader in the May issue, will involve a complete discussion of Galloping Ghost from start to finish.