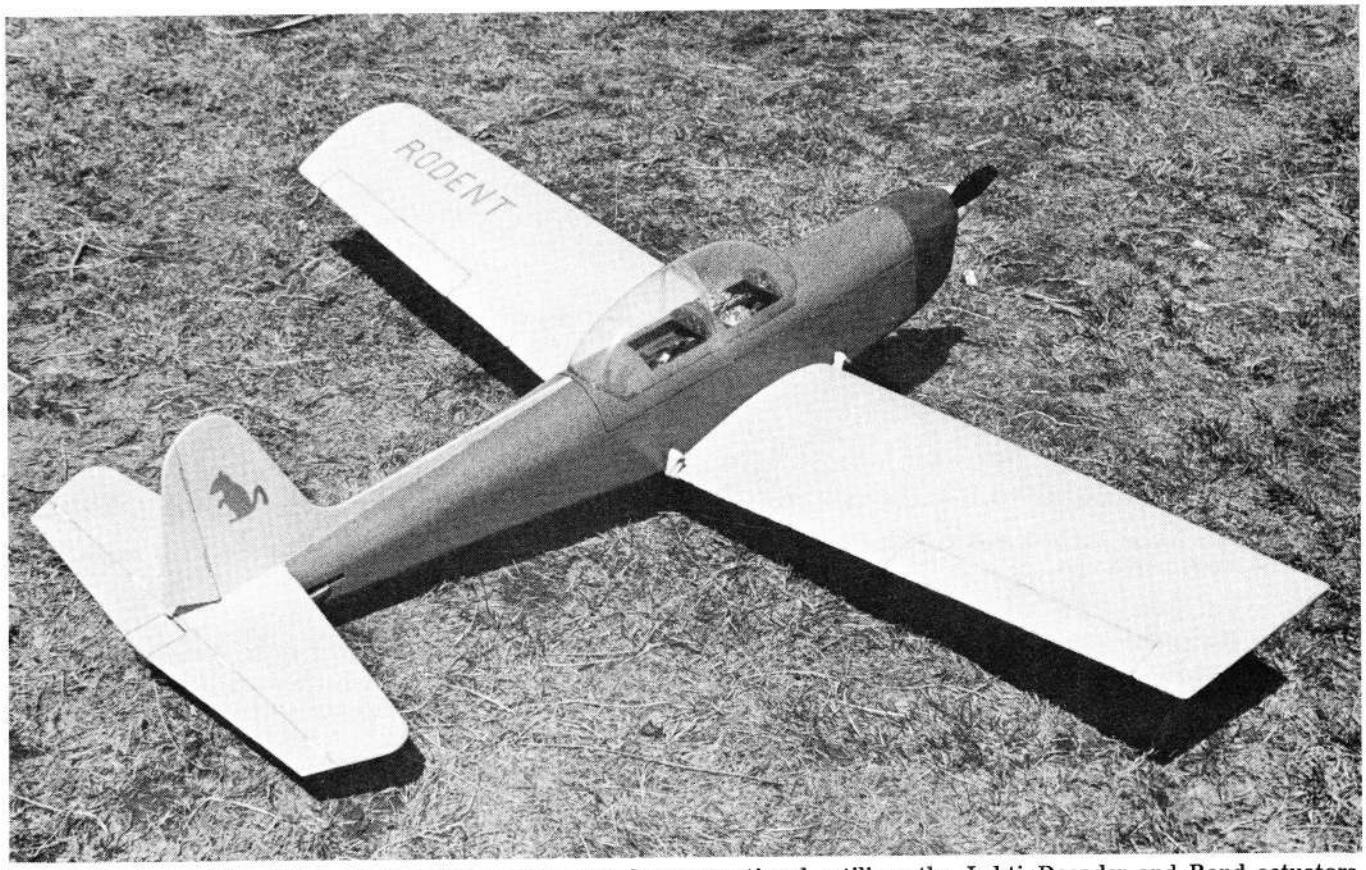

The Rodent, capable of full stunt performance on pulse proportional, utilizes the Lahti Decoder and Rand actuators operating throttle, elevator, ailerons and rudder. Soon to be presented in RCM, this .10 powered design offers sophisticated performance for a minimum of expense.

The LAHTI DECODER

A HIGH PULSE RATE PROPORTIONAL DECODER SYSTEM THAT PROVIDES 'FULL-HOUSE' PERFORMANCE WITH AN AIRBORNE WEIGHT OF ONLY SEVEN OUNCES. BY ABBOTT W. LAHTI

This pulse width-rate decoder was designed to satisfy the following requirements:

1. Very low system current drain so as to provide long flights with a light weight battery pack.
2. Suitable for ½A as well as larger aircraft.
3. Relayless operation.
4. A high neutral pulse repetition rate.
5. Light decoder package weight.
6. Relative simplicity.
7. A minimum of adjustments.

FIGURE 1 represents the simplest form that this decoder may assume. Q_1, Q_2 and Q_3 take the place of the receiver relay and drive the rudder servo. Rate information is obtained by the differentiation of waveform **b** by C_1 and R_1

FIGURE 9: The complete system with two Rand actuators, Controlaire receiver, decoder, and light-weight battery pack.

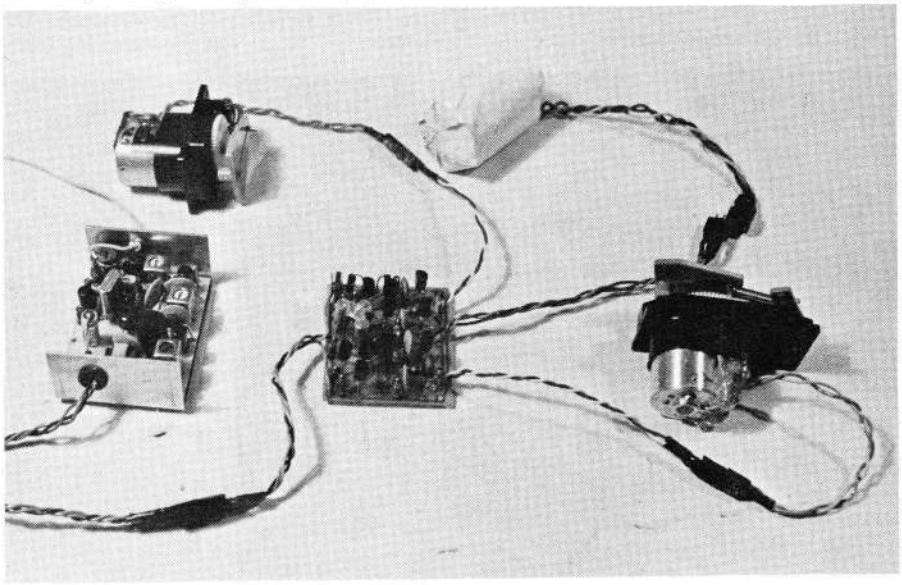

FIGURE 1. SIMPLEST DECODER

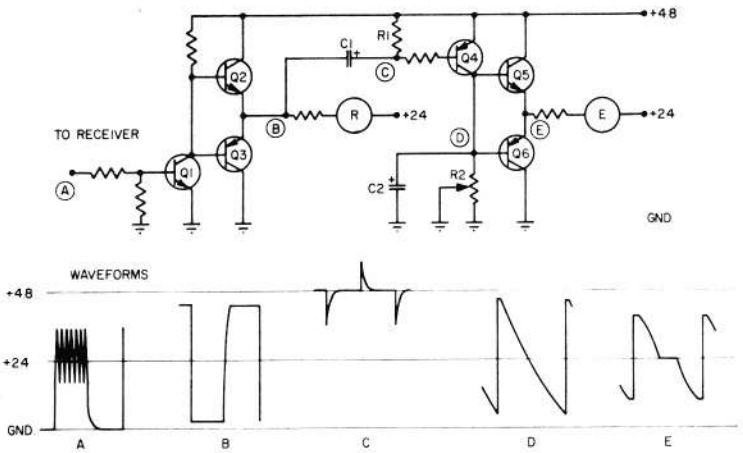

FIGURE 2. PULSE AMPLIFIER ADDITION

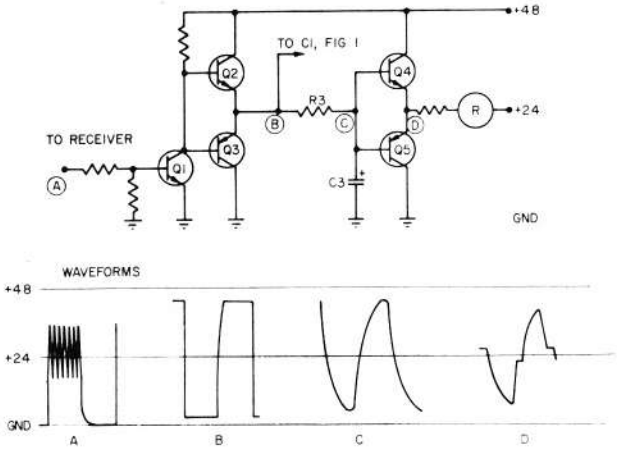

giving waveform **c**. Only the negative going spikes of **c** turn on Q_4. The positive going spikes at the collector of Q_4 are integrated (stretched) by C_2 to give waveform **d**. R_2 is adjustable so as to balance the waveform about the + 2.4 volt level at the selected neutral pulse repetition rate. This centers the elevator. Waveform **e** drives the servo. Q_1 and Q_4 are of opposite polarity so that under no signal conditions only Q_2 and Q_6 are turned on and the servos are powered by each half of the battery, rather than both on one half. This enables low-motor to cycle easier if the signal is lost and the battery is weak. Notice that the drive to the rudder servo is a full square wave which dissipates extra power while the elevator servo receives an integrated waveform which gives less dissipation. This decoder could be used with the low drain TO-5 motors.

In order to reduce the dissipation in the rudder servo it would be desirable to integrate its square wave drive. This can be done by means of a capacitor connected from the collector of Q_1 to ground. One problem with this technique is that this integrated wave will be poorly differentiated by C_1 and R_1, hence there will be no rate signal.

FIGURE 3. DRIVE CIRCUIT

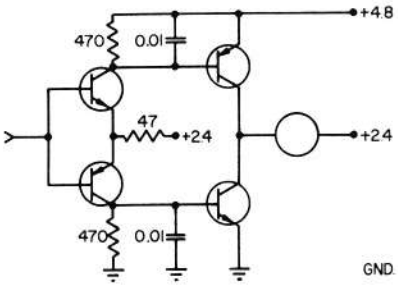

FIGURE 2 represents a way of circumventing this problem. A pulse amplifier consisting of Q_1, Q_2 and Q_3 drives C_1 directly and drives the rudder complementary emitter followers via R_3 and C_3 which provide integration and hence less current drain. The elevator circuitry remains the same.

The complementary emitter follower servo driver has insufficient swing to drive servos such as the Rand or Controlaire, etc., so the drive circuit of figure 3 is used. This basic power amplifier is quite conventional except for the 0.01 microfarad capacitors across the output transistor base resistors. These capacitors slow down the turning on and off of the output transistors, removing a great deal of the "hash" otherwise generated which can be a source of interference.

FIGURE 4 is the schematic of the complete decoder. A resistor and a low voltage Zener diode are included to supply a regulated and decoupled power source for the receiver. The Zener diode should have a sharp "knee" in the 5 to 10 ma range. Table 1 is the list of materials for the decoder. The system power supply is 4.8 volts with a tap at 2.4 volts.

FIGURE 5 shows the output stages

FIGURE 4. COMPLETE SCHEMATIC

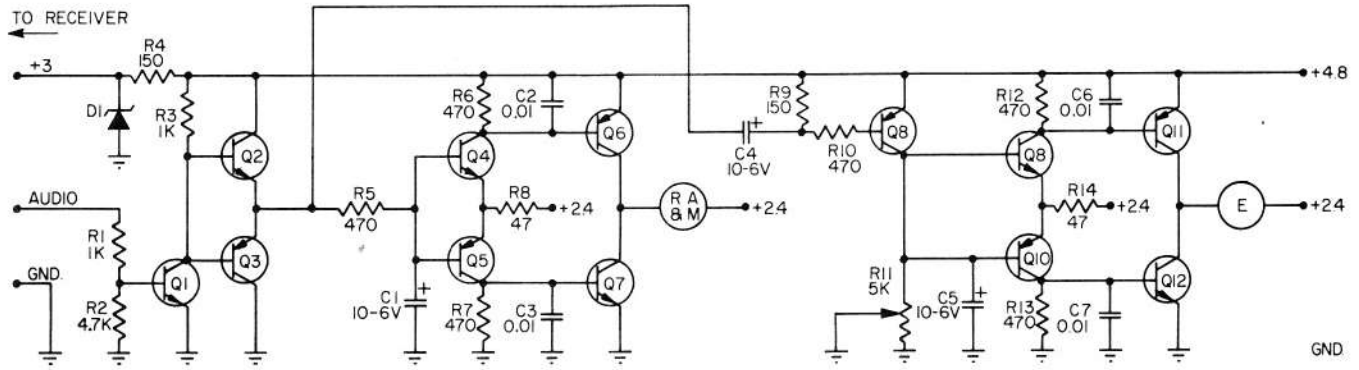

C8 10-6V ON RECEIVER

K = TIMES 1000

CAPACITORS IN MICROFARADS

NOTE:

FOR LOW RUDDER SERVO POWER REQUIREMENTS, R5 MAY BE INCREASED TO 1K OR 2.2K.

FOR GREATER SERVO POWER, REDUCE R8 & R14 TO 22Ω OR 15Ω.

FIGURE 5. RECEIVER MODIFICATIONS

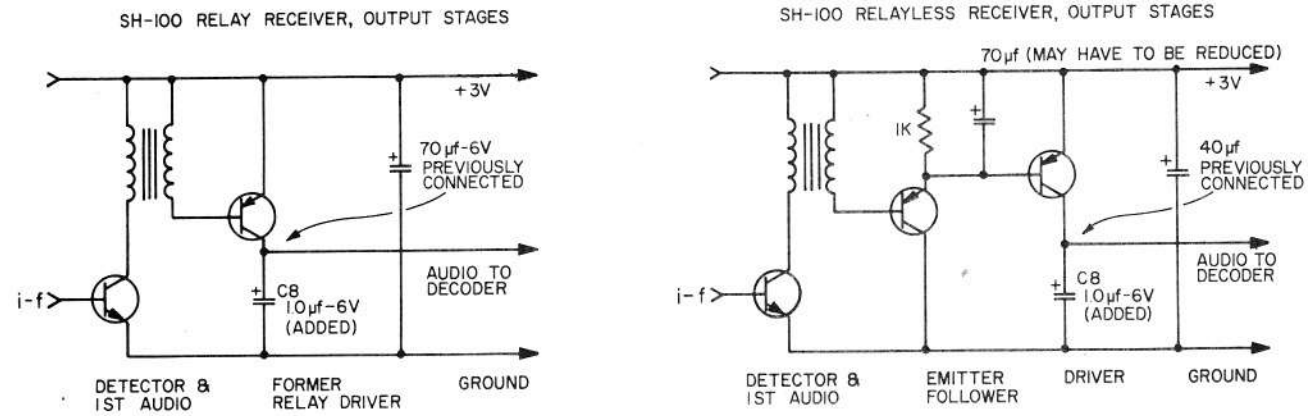

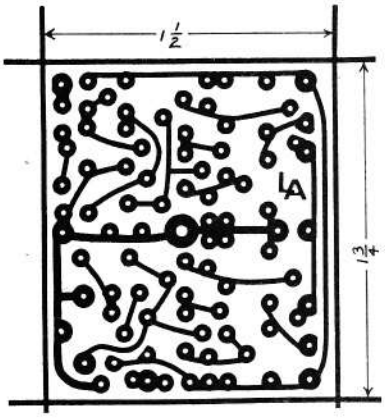

ACTUAL SIZE PC BOARD

of the Controlaire SH-100 relay and relayless receivers and their connections to the decoder. Since the Zener diode does not have as low an impedance as the NiCd cells, it is wise to reposition the 40 or 70 microfarad capacitor in the receiver (formerly across the relay or output transistor) to be across the plus 3 volt to ground power lines to the receiver. This removes the receiver generated pulse and tone noise. It will be necessary to cut the printed circuit foil

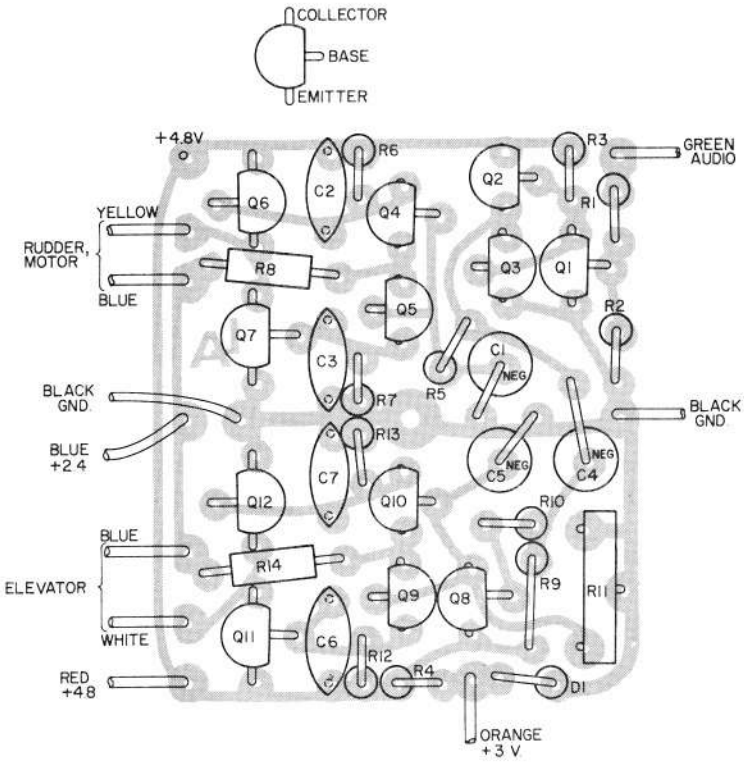

FIGURE 8. COMPONENT VIEW

FIGURE 6. SYSTEM WIRING DIAGRAM

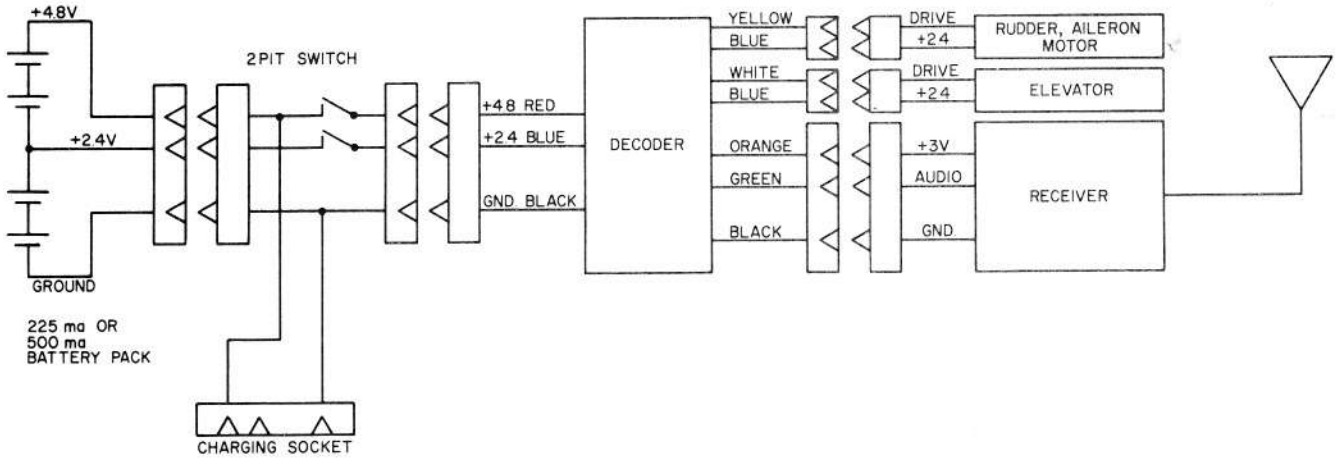

at the capacitor positive terminal and add a jumper from that point to the plus 3 volt lead. Add the 1 microfarad, 6 volt capacitor as shown.

FIGURE 6 represents the system wiring diagram. The servos are connected via nonpolarized connectors to facilitate the phasing of the actuator motion.

The decoder plus receiver power supply has been mounted on a 1½" by 1¾" by 1/32" G10 glass epoxy printed circuit board. **FIGURE 7** is a view of the copper side of the board and **FIGURE 8** is the component view. The layout provides room for TO-5 packaged output transistors, although the suggested devices are recommended. **FIGURE 9** is a photograph of the system. **FIGURE 10** and **11** are additional views.

The entire decoder weighs one half ounce. Total flying weight of an SH-100 receiver, four 225 ma NiCd button cells, a Rand HR-1 and HR-2 (with 1.5 volt, red dot color coded motors), the decoder and wiring harness and switch is approximately seven ounces. This is an equivalent weight to a conventional Galloping Ghost system but with proportional, noninteracting control.

A continuous run was performed with the decoder and Rand actuators without the receiver, using a freshly charged power source of four 500 ma GE button cells. A pulse generator supplied the signal. The neutral pulse repetition rate was 20 hertz. Two hours and five minutes later the battery voltage had diminished to the end charge point of 4.4 volts. Motor control (rudder-aileron servo go-around by either tone on or off) was still functional at the end. During the test, the pulse width and rate were changed and the motor control operated about every ten minutes. Using a 225 ma NiCd battery pack and with the receiver, the test ran 55 minutes before the end of charge point was reached. Width changes and cycling were done every five minutes. There was negligible control surface drift with battery voltage changes.

If desired, the decoder may be used with a relay receiver. The decoder input is connected to the armature contact, one stator contact is connected to the receiver negative supply and the other stator contact is connected to the receiver positive supply. The receiver negative supply must be connected to the decoder ground circuit. Because the relay receiver has a higher current demand than the 3 volt supply of the decoder can provide, it must have its

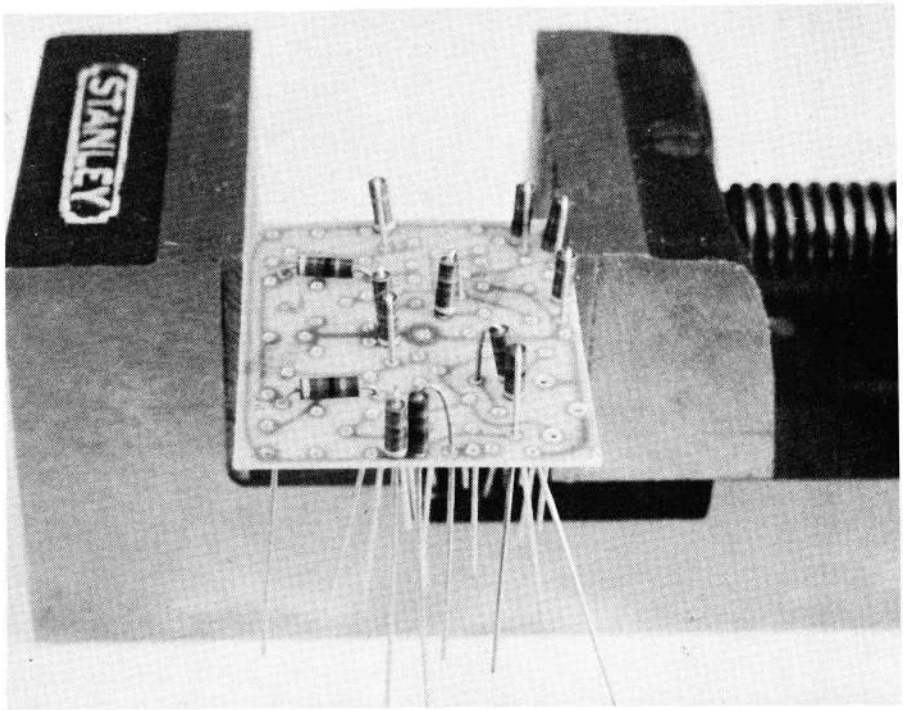

All resistors placed in position. Drill press vise used to hold PC board.

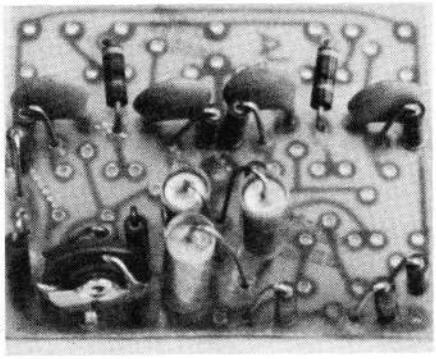

Capacitors added to PC board.

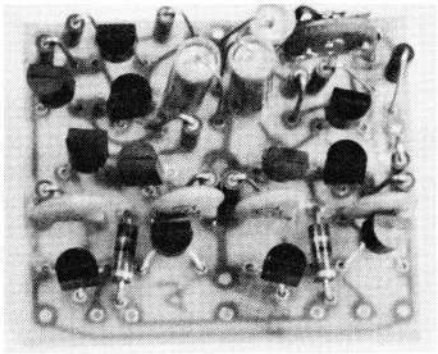

All transistors in place.

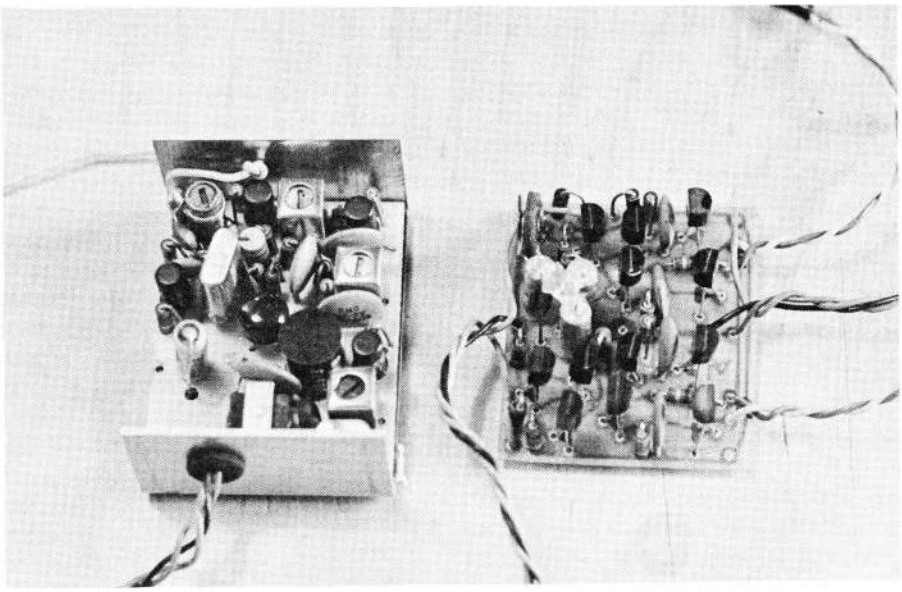

FIGURE 10: Converted Controlaire SH-100 receiver and completed decoder.

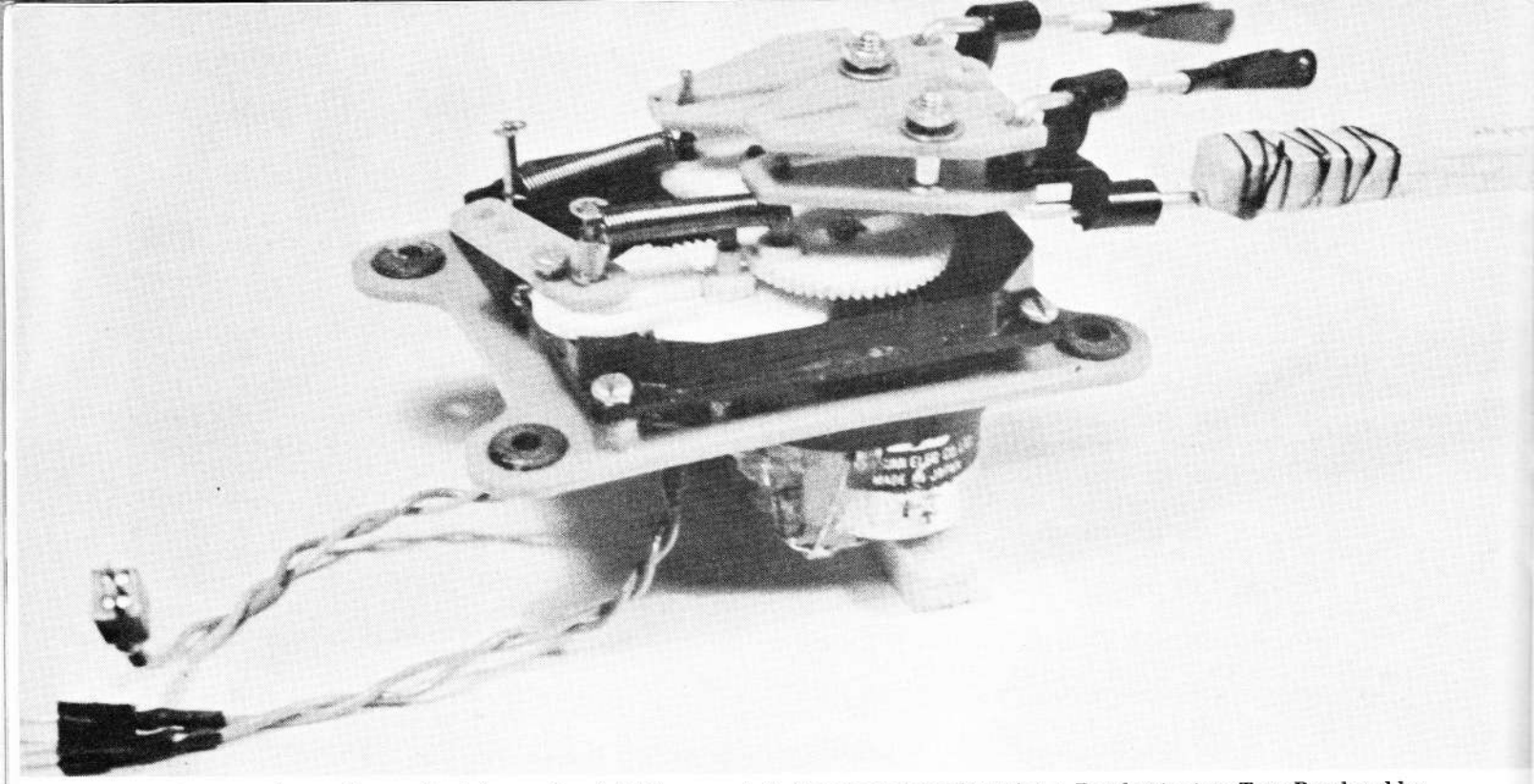

A close-up photo of a method for easily obtaining coupled ailerons and rudder using a Rand actuator. Two Rand rudder plates are stacked and spaced 3/16" using the ferrules supplied in a Rand mounting kit and are held together with 3-48 x 1/2" machine screws using lock washers. Kwik-Links connect to the ailerons. This particular system used in the author's low-wing Rodent. The elevator pushrod is not connected in this photo.

own power source of two one-half pen cell size 1.5 volt alkaline cells.

Although twelve transistors are used, only four are directly concerned with signal processing. The remainder comprise the two push-pull servo driver amplifiers. They are all low cost plastic silicon devices. The output transistors have a 600 ma capability. The circuit is noncritical and component tolerances have no effect on its performance.

A non-tapped 3.6 volt three cell NiCd battery is not used for the following reason: The regenerative switching circuits usually used with that type of battery require extra complication to drive the servo with the low dissipation integrated waveform and in their simplest form usually have a 100 ma or more current drain per function without the servos being attached, With the servos, the total current drain may exceed 700 ma. By comparison, the Lahti decoder system current drain with two Rand actuators and receiver is approximately 200 ma when using a 20 hertz neutral pulse rate. The transmitter changes are simple. The following refers to the Controlaire Galloping Ghost transmitter only. The 15 microfarad capacitor connected to the unijunction emitter is replaced by a 5 microfarad, 15 volt capacitor. This increases the neutral pulse rate to around 18 to 20 hertz. The pulse width ratio is increased by paralleling the 10 K resistor from ground to the rudder pot with a 5 K pot (a Mallory MTC-1-5000 is suitable). The 4.7K resistor leading to the other side of the pot is replaced by a length of wire. Other transmitter manufacturers will undoubtedly supply information pertaining to their equipment upon request.

System alignment (to be done after the transmitter modifications): Plug all servos into the decoder and connect the receiver and batteries. Turn on both the transmitter and decoder system switches. The rudder and elevator servos should be vibrating slightly but they will probably not be aligned. Adjust the 5K pot which was added to the transmitter to center the rudder servo. Then adjust the 5K pot on the decoder board to zero the elevator servo. Operate the transmitter motor control. Both servos shouid cycle around and if one of them is a LR-3 or equivalent, the motor control bar should move. Make notes as to which way the servos move for right-left, up-down and motor control. The system is now ready to install in an aircraft. There should be very little interaction between rudder and elevator control.

The performance of this decoder indicates that the design requirements have been met.

ADDITIONAL NOTES:

If your transmitter has a neutral pulse rate in the 10 to 15 Hz range, the value of C5 should be increased to 22 uf-15v (Sprague 150D series, 20%, tantalum) or to 20 uf-6v (Sprague TE1090, aluminum) to avoid running out of adjustment range of R11.

If desired, C1 and C4 may be increased to the same value to avoid buying two capacitor values. In this case, R5 should be increased to 1000 ohms and R9 decreased to 47 ohms.

When using the Lafayette VC-58 pot for R11, be sure to bend the center tab underneath its body so that when it is mounted its screwdriver slot will be to the outside of the PC card.

In general, the system current drain lessens as the neutral pulse rate is raised and the servo power increases as it is lowered. The following table illustrates good compromises between current drain, servo power, pulse rate and aircraft size:

ENGINE SIZE	NEUTRAL RATE, Hz		C1,C4,C5	R5	R9	BATTERY Ma
0.02 to 0.049	18 to 20		10uf	1K	150	225
			20uf	470	47	225
0.049 to 0.15	15 to 17	or	20uf	470	47	225 or 500
0.15 and larger	12 to 14		20uf	680	47	500

NOTE: If the elevator response is sluggish, then the neutral pulse rate is too high for the actuators used. If the rudder response is sluggish, then R5 should be decreased in value.