DU-AC Dual Action Actuator

R.C. Proportional gains an auxiliary power actuated arm.

▶ The actuator described in this story, as you might imagine, is the result of much testing and an endless number of test arrangements. In all, about two dozen different schemes were either built or completely drawn out and discarded before the model outlined here was decided upon. This model is actually the third in a series which accomplished the same end but used a different layout.

Like so many experimenters today who want a little extra from a single channel rig we wanted to enlarge on a proportional rudder actuator which would give some extra commands without adding extra circuits. The ground work was laid almost ten years ago, but, as they would say at the missile test center, "It didn't become

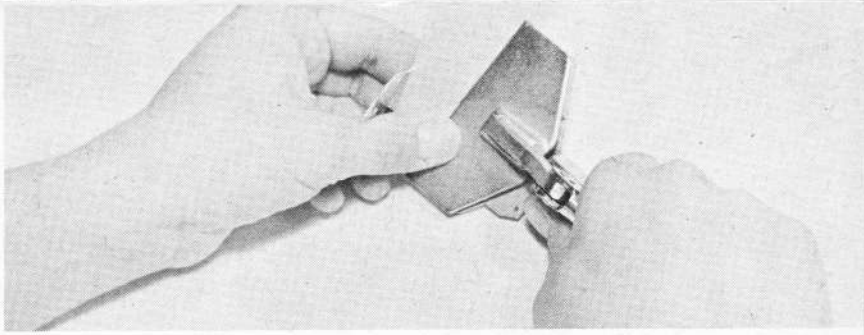

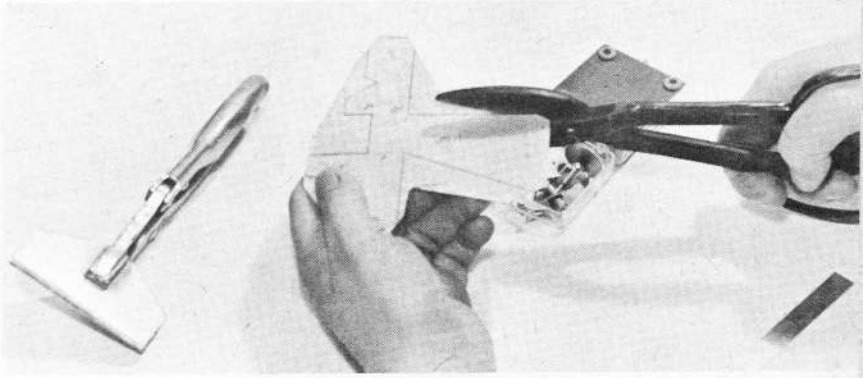

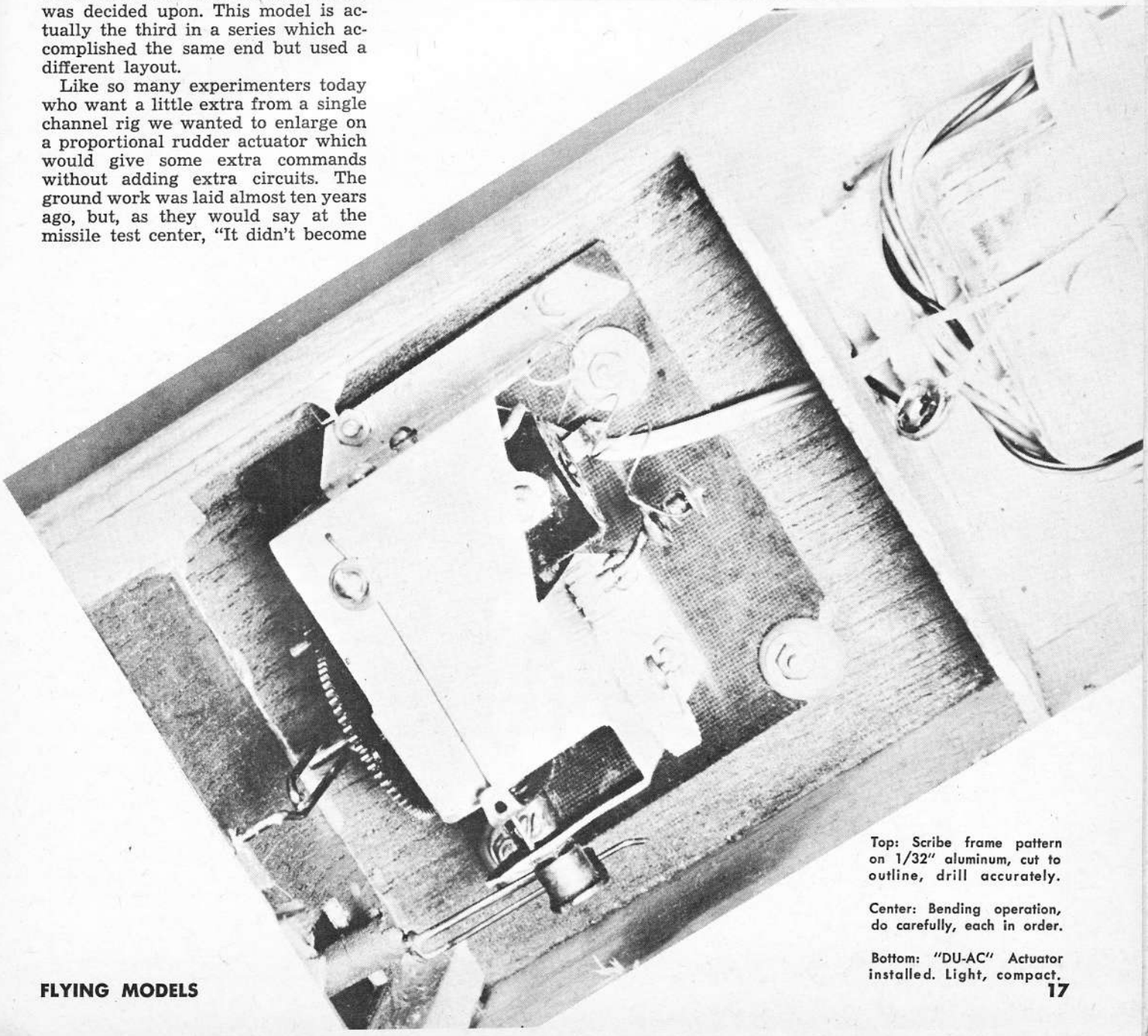

Top: Scribe frame pattern on 1/32" aluminum, cut to outline, drill accurately.

Center: Bending operation, do carefully, each in order.

Bottom: "DU-AC" Actuator installed. Light, compact.

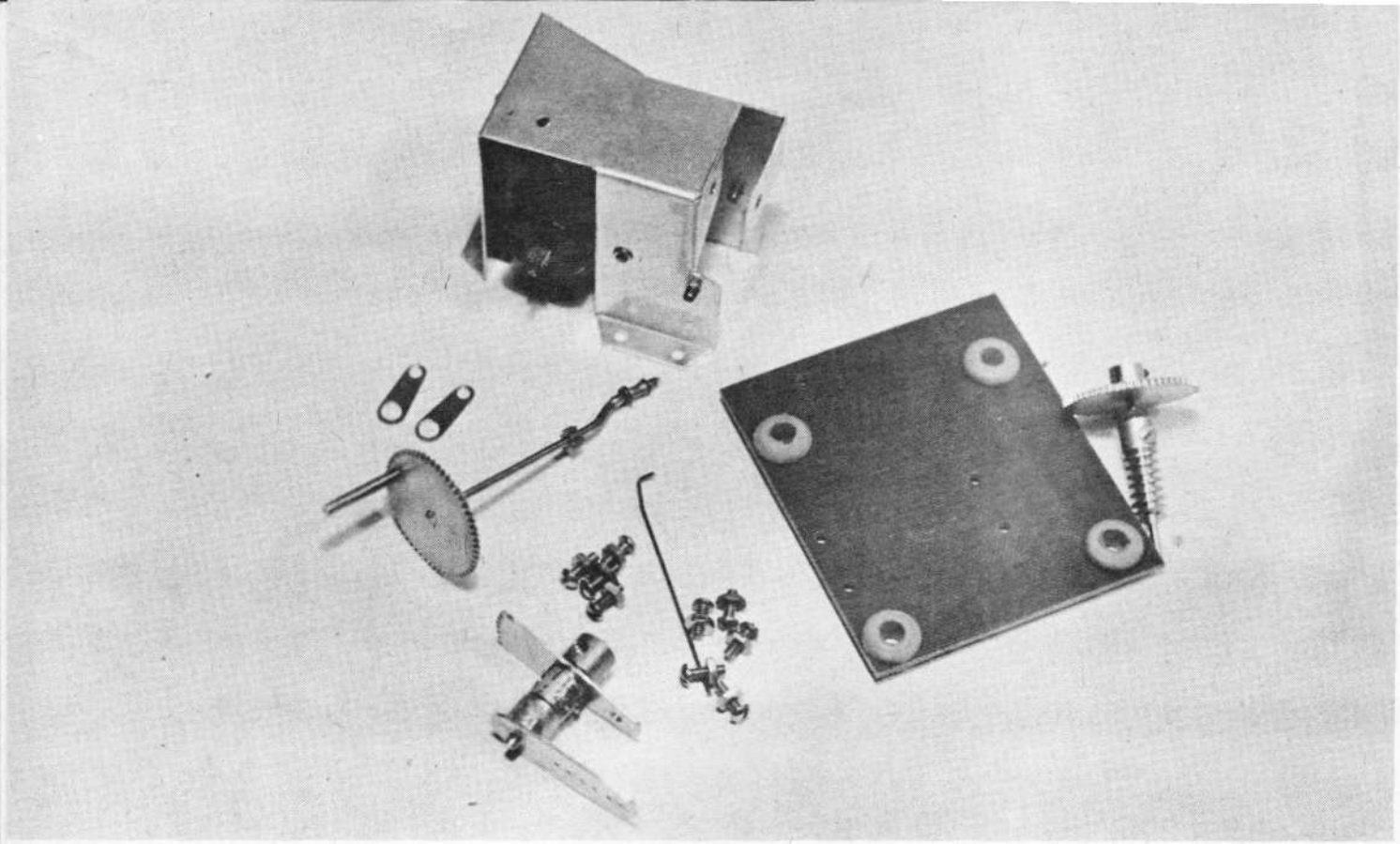

Here the frame which houses the motor is shown grouped with other parts of the assembly. Accompanying full size plan plates detail assembly, necessary gears and components. Construction is not difficult.

DU-AC

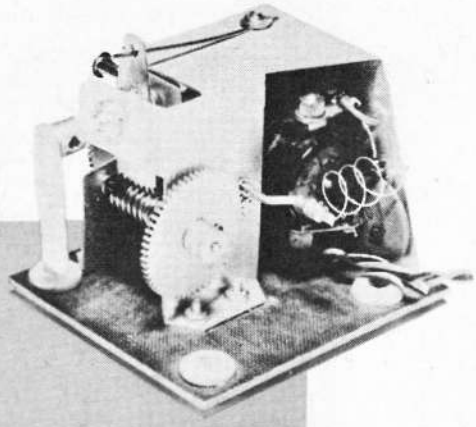

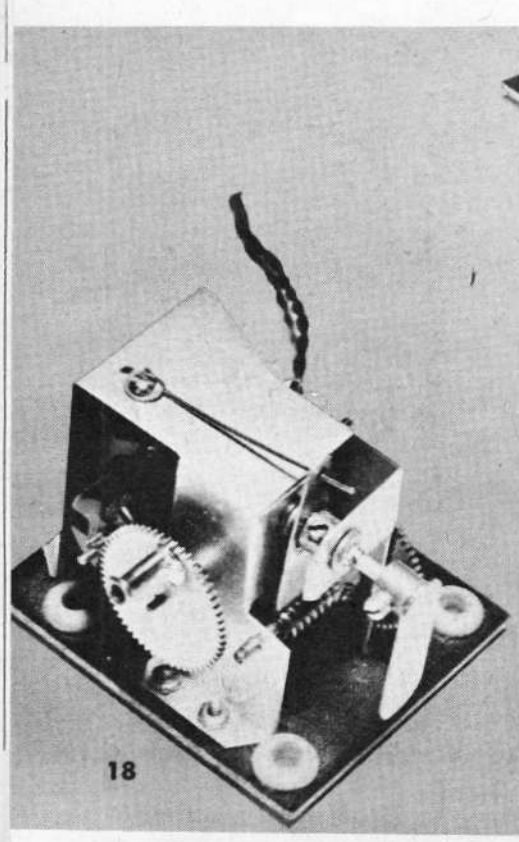

Above: Assembled unit ready for installation. Proportional R.C. Actuator design has proven very reliable, and provides a strong source of movement for controls. Battery drain is low.

Left: Ideal for maintaining mean altitude on pylon racers, engine speed trim, elevator trim and similar tasks. Gears have never hung up on any of the test models. Interesting ideas.

operational' for nearly four years."

Two separate controls were possible by "timing" the control links, to make one control go to neutral 180 degrees from its centered neutral and then kick another link. This was discarded a long time ago simply because the "kicked" control was always the elevator and it doesn't take long for a modeler to realize, he needs a hefty shove to make elevator control reliable. If engine control, rather than elevator movement, is the desired extra operation; and a clapper is employed, then a kicking loop will often work. But, because most modelers like the Bramco type engine throttle, we are faced with the same need for a strong muscle.

So it was that about five years ago we finally worked out the theme incorporated in the "DU-AC." The first model was a square box and completely enclosed. This device spent almost two years on the bench as a fascinating toy and finally wound up in our P-51, which appeared in **Flying Models** a few seasons back.

The next two models looked almost alike and so we'll treat only the last one which is described here. This one was a natural progression and took its place along side the first model as a bench test. By now it was plain to see that the last of the DU-AC's was far superior to the boxed model, which depended upon the box being completely closed for strength and was a rascal to service while open.

Individual strength of any device

(*Continued on Page* 44)

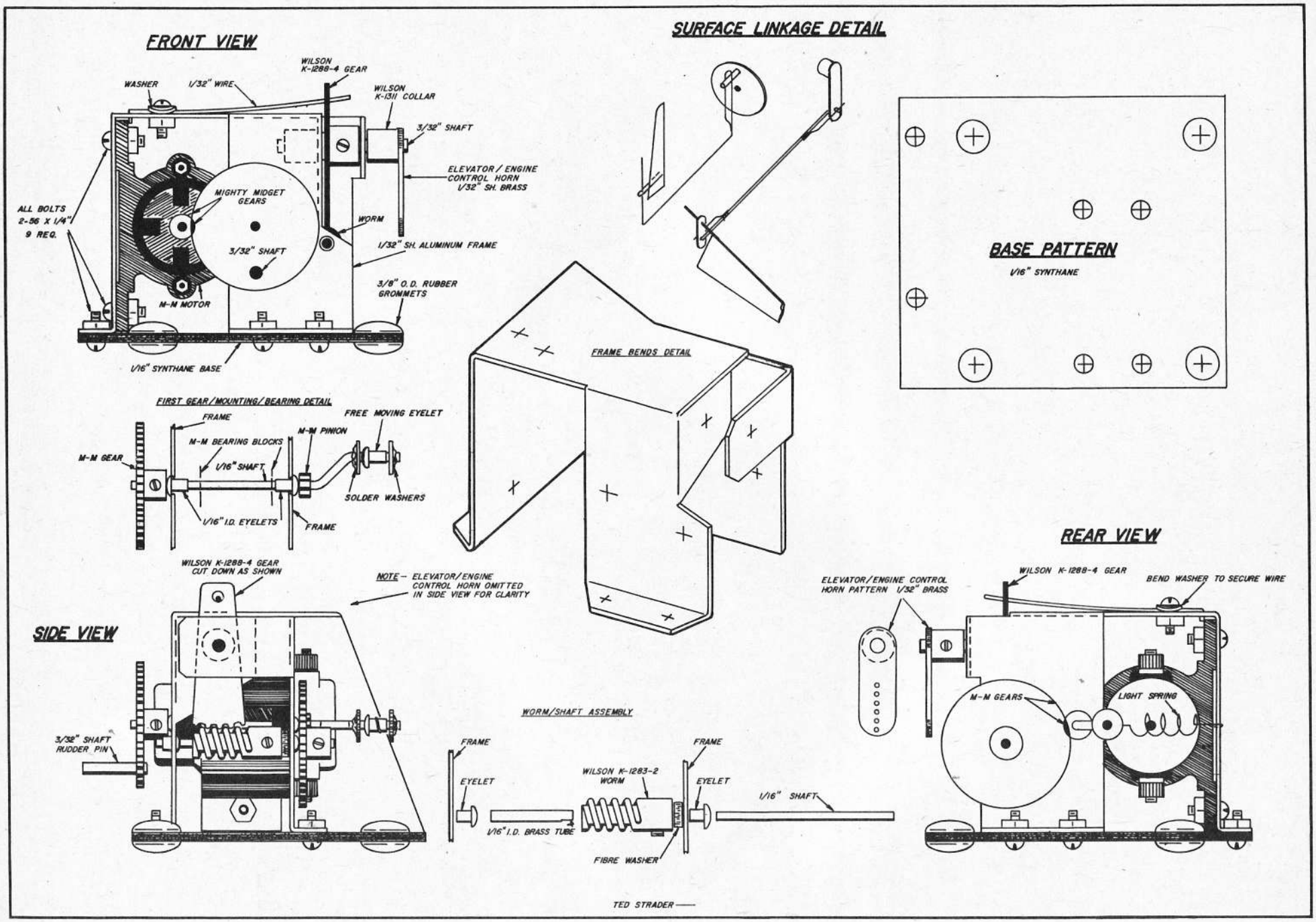
FRONT VIEW
WILSON K-1288-4 GEAR
WASHER
1/32" WIRE
WILSON K-1311 COLLAR
3/32" SHAFT
ELEVATOR / ENGINE CONTROL HORN 1/32" SH. BRASS
ALL BOLTS 2-56 X 1/4" 9 REQ.
MIGHTY MIDGET GEARS
WORM
3/32" SHAFT
1/32" SH. ALUMINUM FRAME
3/8" O.D. RUBBER GROMMETS
M-M MOTOR
1/16" SYNTHANE BASE
SURFACE LINKAGE DETAIL
BASE PATTERN
1/16" SYNTHANE
FRAME BENDS DETAIL
FIRST GEAR/MOUNTING/BEARING DETAIL
FRAME
FREE MOVING EYELET
M-M PINION
M-M BEARING BLOCKS
M-M GEAR
1/16" SHAFT
SOLDER WASHERS
1/16" I.D. EYELETS
FRAME
WILSON K-1288-4 GEAR CUT DOWN AS SHOWN
NOTE – ELEVATOR/ENGINE CONTROL HORN OMITTED IN SIDE VIEW FOR CLARITY
SIDE VIEW
3/32" SHAFT RUDDER PIN
WORM/SHAFT ASSEMBLY
FRAME
EYELET
WILSON K-1283-2 WORM
FRAME
EYELET
1/16" SHAFT
1/16" I.D. BRASS TUBE
FIBRE WASHER
REAR VIEW
ELEVATOR/ENGINE CONTROL HORN PATTERN 1/32" BRASS
WILSON K-1288-4 GEAR
BEND WASHER TO SECURE WIRE
M-M GEARS
LIGHT SPRING
TED STRADER

WIRING DIAGRAM

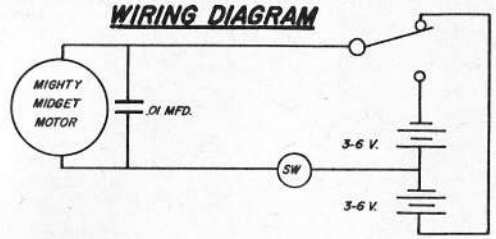

FRAME PATTERN

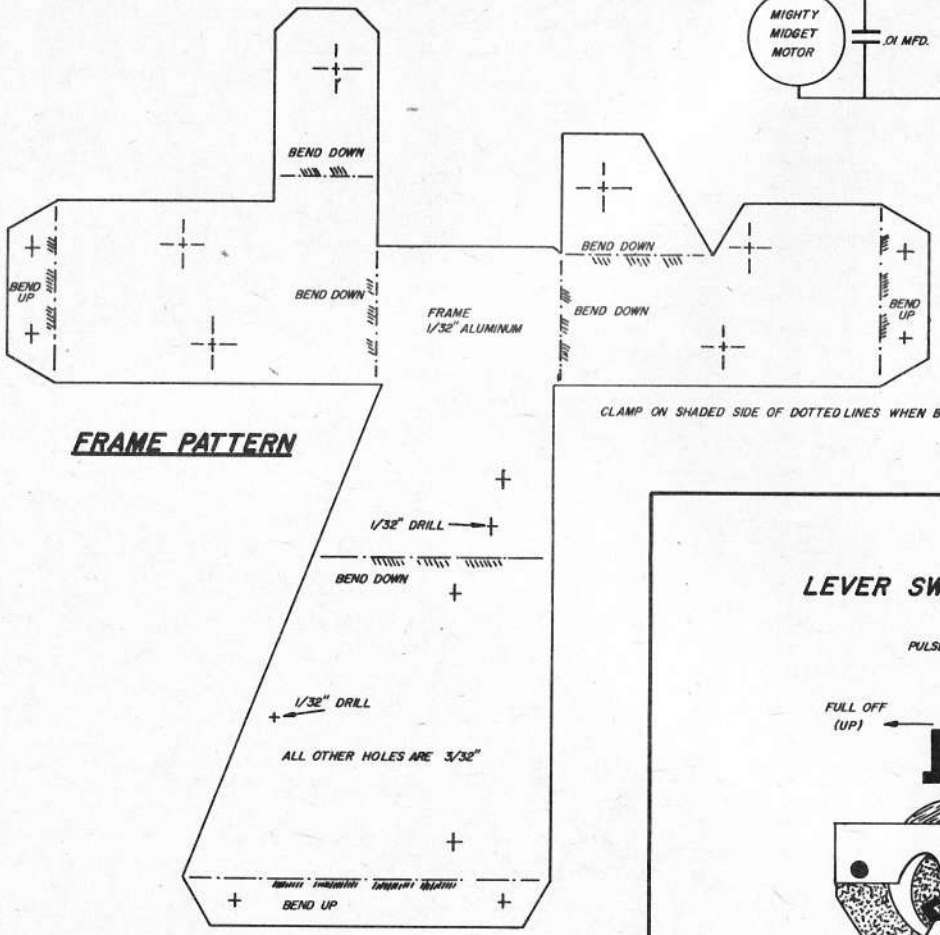

LEVER SWITCH "STICK"

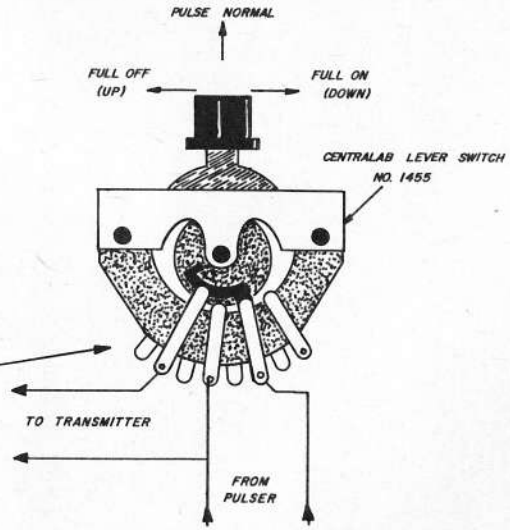

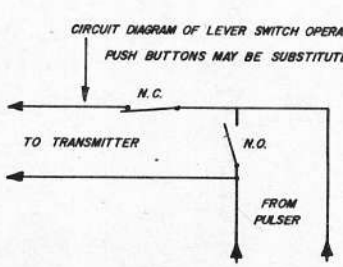

ALTERING CRESCENT PULSER

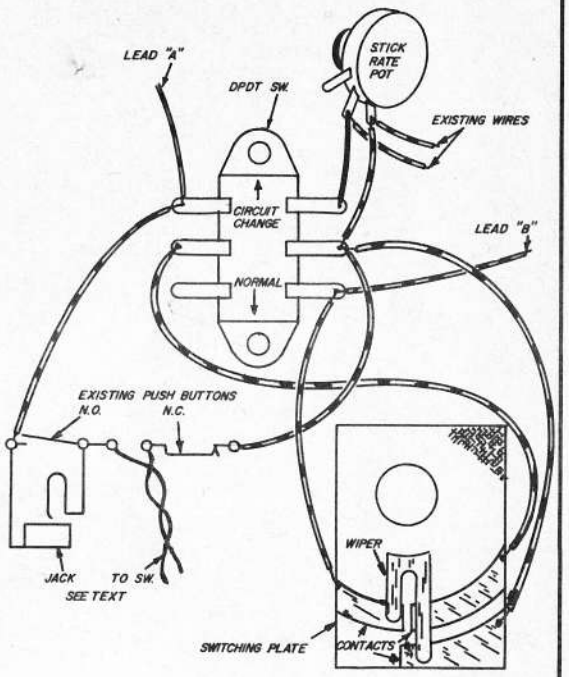

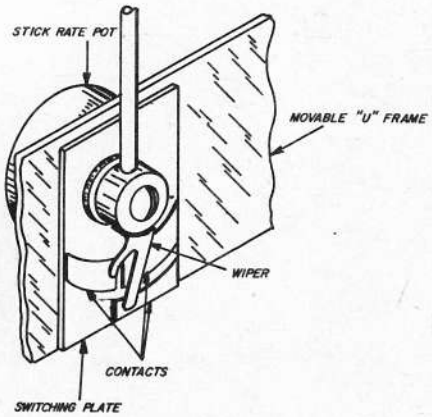

DU-AC ACTUATOR

(*Continued from Page* 18)

used in R/C is always a great concern of the enthusiast and we point with pride at the oddly shaped frame finally decided upon. The actuator pictured in the compartment of the model has been in that model almost four years. A close examination of the picture will disclose tell tale evidence of a hard life. The model has been dismembered on three occasions, each time the actuator has either been thrown out or the compartment filled with refuse. You'll notice part of the base torn away around one of the rubber grommets. There have also been numerous flights when the plane has come to a sudden stop in a tail high attitude. (We've never been accused of being a good pilot!!) The actuator pictured is as it exists today, after all this abuse, and the original Mighty Midget motor is still in one piece having yet to suffer its first crack or show signs of strain!

Before we get at the actual construction there are a couple of questions I'm sure in the minds of many builders.

I'd like to attempt to answer a few.

To date I have built an even dozen DU-AC's such as the two pictured in this story. Some of these have been for friends to use as they see fit. All have been treated differently and all are still alive and kicking. Each has shown similar characteristics with regard to battery life and dependability. Once the unit has been broken in, it will give about 45 minutes of dependable dual operation on 4 pencells before the elevator/engine portion begins to slow down. We usually have two or three sets of pencells and as one set begins to tire replace them and let then rest up. In this way they can be used over and over again.

Just what actually happens during the operation of the "DU-AC"? Basically it's a rudder actuator with a power take off. During normal rudder operation the gear reduction to the power take off is such that no movement is noticed from the elevator/engine control horn. When either elevator or engine control is desired (depending upon how you have hooked the linkage) you send either a solid signal or no signal. This allows the motor to run in either direction, i.e., clockwise during no signal and counter-clockwise during solid signal or vice versa. The rudder gear rotating 360 degrees results in a neutral rudder action, but begins to move the elevator/engine control horn in one direction or the other.

A thin gear was decided upon working from the worm to eliminate the possibility of jamming. Many times we have set this gear arrangement so the spur gear was resting on top of the teeth of the worm, to see if it was possible to jam the unit and it was never possible in ours or any other unit. If you hold too long while attempting to get either an engine or elevator control, the gear simply rides off the worm only to be returned to the groove by the 1/32" wire spring when the opposite control is desired.

It has no doubt been obvious from the start that this unit will not satisfy the demands for instantaneous loops. Stunting at high altitudes is possible but we've found that the real value of the dual operation, when the secondary command was applied to elevator, was as a unit for trimming a new plane during initial flight tests, for compensating for changing wind velocities or on a pylon racer where a mean altitude was desired at all time. When the secondary control is applied to engine, you can vary a throttle to any degree between high and low and back again.

Of late we have found a new value in the "DU-AC" where intermittent interference has been experienced. Under normal circumstances our unit is so arranged that signal off results in neutral rudder and up elevator. Should the plane get out of range it would attempt to climb, lose speed and mush in. At any rate this is better than loosing it O.O.S. The hookup could be reversed in areas where interference has been encountered and a stray signal would cause the climb into a mushy attitude. If the power arm is attached to throttle the same results could be arrived at to slow the engine down, resulting in one saved plane.

One last item and then we're on our way. If the batteries begin to tire in the air, what then? If you push a set of batteries this may happen. It's happened to us.

There is no real sweat as the "DU-AC" will give you a warning in the increased length of time it takes to get either the elevator or engine setting you call for. When this happened to us, we trimmed the ship out and went on flying rudder only. The 45 minutes we spoke of earlier, was for reliable dual operation. The rudder will still work for at least another hour after that.

• CONSTRUCTION: The basic tool compliment includes a pair of metal bending pliers; 1/32", 3/32", 1/8" and 1/4" drills; tin shears; small triangular file; small flat file; screwdriver and a steel rule. With these, a little care and patience, you should not find the construction too difficult.

Transfer the frame pattern to a sheet of medium grade aluminum, 1/32" thick. The kind found disguised as a cookie sheet works fine!! Mark and drill all holes while the pattern is still flat. All holes in the frame are 3/32" diam. except two. One is for the bent end of the 1/32" wire spring on top, and the other is for the end of the

motor centering spring or a hook if rubber band is used for centering. It might be well to drill all holes 1/32" diam. first. This will allow more accuracy when enlarging the holes to 3/32" diam. later.

Next cut the frame to outline, preserving the general shape as much as possible. Using a small, fine flat file, smooth off the edges before bending. Now it's time to make the bends. This must be done with much care as the final location of all the important holes we've drilled, depends upon the bends being made accurately.

As a small vise may be used for some of the bends, a system of succession will have to be worked out by the individual to determine which bends will be made first. Once this has been done the bends can be made in order and you'll be ready to mount all the parts inside.

With the frame bent, it's now time to place the motor and first gear/centering shaft in place. If it fits freely we can now bend the crank end of this shaft, drive the pinion gear on, mount the free moving eyelet and the washers in place and solder the washers. Bolt the motor lightly in place and secure the first gear assembly.

The drawings are based upon the Mighty Midget motor which came equipped with brass gears. Those who use this model will have to drill out the bearing blocks on the top with a 3/32" drill to accommodate the eyelets which act as bearings and also restrain the motor. If, however, you are using the new Mighty Midget motor which comes with a nylon gear, the holes are already 3/32" diam. to accommodate the 3/32" diam. shaft. This nylon gear will have to be removed. Save the shaft as it will be used later.

The extra gear sets which are available are still brass. This brass gear is drilled near its perimeter to accommodate a 3/32" diam. shaft which acts as a rudder pin. The nylon gear is then used as the second gear, which is coupled to the worm.

Here, again, the drawings show the old style motor for the benefit of those who may still have some. If the new style is used, there will be no need of using a 1/16" I.D. brass tube bushing inside as the worm gear, as the 3/32"" shaft we've been saving will fit perfectly. If eyelets are to be used it will be necessary to drill larger holes for the worm shaft, depending upon the outside diameter of the new eyelets. Press the nylon gear on one end of the 3/32" diam. shaft and insert in place, installing the fibre washer and then the worm as per plans.

The spur type gear used in conjunction with the worm is a Wilson K-1288-4, cut down as shown, with at least five but not more than 7 teeth left on. A hole is drilled in the other end to accommodate the return spring. It is important that a thin gear is used to eliminate any possibility of this gear arrangement binding. A thin gear will ride off either end of the worm, if off or on signal is held too long. The 1/32" wire keeps it tight against the worm ready to engage when the opposite signal is sent. If a thick gear was used here the teeth might possibly bind. This arrangement has never refused to return even when purposely tampered with. The Wilson K-1288-4 is held in place with a combination of Wilson K-1311 collars on a 3/32" diam. shaft. The outer collar is combined with a brass control horn for power to either the elevator or engine.

Once this gear and shaft has been installed the 1/32" wire can be mounted on top. This is held in place by a bent washer plus a 2-56 x 1/4" bolt and nut.

The next step is cutting the base from a 1/16" sheet of synthane linen or micarta. We suggest 1/8" diam. holes, to correspond with the 3/32" diam. mounting holes in the frame, to allow the unit to be shifted a bit for better fit. Once the bolts have been tightened, it should never shift. All that remains is inserting the rubber grommets in place, wiring the motor and installing either a very light centering spring or a small rubber band. Remove spring or rubber for now.

With the unit finished and all bolts tightened turn the first gear by means of the rudder crank pin to see if the entire unit works freely. Normal tightness caused by snug bearings is permissible. A severe gear bind will have to be remedied. Once you are satisfied there is no undue bind in the unit we'd suggest wiring two batteries to the motor, place a drop of oil on each bearing and let run (direction is not important at this stage) for about 1 hour. If you wish the cut down spur gear may be left out of this operation as it is supposed to be a loose fit from the beginning, thereby not needing any breakin.

Once the unit is free running the centering spring or rubber band can be attached. A little tinkering will be required to arrive at the right tension.

The next step is to decide on the design you're going to install it in!

● Now that the unit is finished there is possibly one other question which might arise. Can this be used for Galloping Ghost, to give simultaneous rudder-elevator action with the Power-Take-Off arm driving the throttle. The answer is yea—with reservations.

The first requirement is a good reliable pulser as you won't be able to rely on built in stops normally found in a simple G-G actuator. We have G-G'd this unit with good results as long as the pulser was in fine tune. This requires a faster pulse rate than is normally necessary when using the unit as we originally intended. The reason for a faster pulse is to keep the rudder pin from "going over the top" during a climbing turn. (At this time, during normal G-G hookups, the rate is slow and the pin is swinging almost 180 degrees from its normal neutral at the extreme of the swing.)

Consequently we used a pulse rate span of 5-15 PPS rather than the normal 2-12 PPS and adjusted the yolk on the elevator to give more up than normal.

For normal operation of the "DU-AC", no pulse rate change is used. We simply set the pulser at a constant speed (usually fastest) and forget it.

• OPERATION: Just as with an attempt at Galloping Ghost with the "DU-AC" is dependent upon a good pulser, so is normal operation. Though it isn't necessary to have a pulser which is capable of rate change to operate the actuator as we describe it, this feature is a good idea. At least your pulser should have a rate of 6-8 PPS.

If your pulser fits this requirement it needs only the addition of a N.O. and a N.C. push button (one each) to fill the bill completely. On one pulser we installed a Centralab No. 1455 level type speaker switch as shown and this acted as our elevator stick or engine throttle, depending upon how the actuator was hooked up.

Later we decided to couple a switch to the stick of our Crescent pulser and came up with the scheme outlined as altering the Crescent pulser.

This became a bit more involved as we went along, as the switching plate would interfere with the normal pulser operation when we were using the pulser for Galloping Ghost. This meant a switch would have to be installed to cut the switching plate in or out of the pulser circuit, to conform to our needs. Thus the hookup outlined.

The wiring scheme outlined was for use on the first Crescent pulser. Of late the company has redesigned it and added a keying relay. The bulk of the Crescent pulsers in use are of the first type so we'll explain the wiring in detail and then give the changes necessary if this switching arrangement is desired on the new type.

The switching plate is of 1/16" synthane linen or similar insulating material with pieces of shim brass contact plate attached by contact cement as shown. This could be made of printed circuit material if desired. The wiper is cut of phosphor bronze. If you plan to key the transmitter by simply breaking the B plus lead, then this wiper should be insulated from the stick or you'll get a shock from it. In our case we key a relay in the transmitter which in turn keys the B plus lead and the wiper can be soldered to the collar as shown.

If yours is the old model Crescent pulser which does not have a keying relay built in, (this is visible through the square opening in the top of the pulser) then lead "A" goes to the bronze wiper on the pulser Mighty Midget motor, which loops up and makes contact with the 1/16" wire shaft. Lead "B" connects to the brass half of the stationary pulser contact plate.

If yours is the new type with relay then lead "A" would connect to the armature of the Jaico keying relay and lead "B" would connect to the normally open contact of the relay.

If you have the new type you will not see the solid twisted wires in the drawing, ignore them. They were added here as identifying marks for owners of the older model pulsers and are left as is. The jack we also show is the modelers option. We had it drawn in and then realized the pulser normally comes with a long lead permanently attached.

If you decide upon this stick arrangement your pulser will now do double duty. When the DPDT switch is in the up position the stick rate pot will be out of the circuit and the switching plate will be in. Rate is then adjusted by the trim pot on the side of the box.

When the switch is in the down position the switching plate is out of the circuit and the pulser operates as it was originally intended.

Be sure that the pulser is adjusted so it never gives full on or full off during extreme rudder control. Adjustment screws are provided on the movable "U" frame for this purpose. One other thing to check, is that the wiper is still making contact (DPDT Sw. up) when the stick is in full right control. We didn't have enough tension on ours and it lifted off the contacts!

• So much for the pulser. Here are a

few final notes to think about when installing the "DU-AC" in you plane.

The actuator can be mounted right side up or upside down with no performance change. Tighten it down, so the grommets are compressed about half and put jam nuts on the mounting bolts.

Be sure the torque rod to the rudder is free moving; even a slight bit on the loose side. It should not move back and forth, however. Be certain, also, that the loop in the rudder torque rod that engages the rudder crank pin, is long enough to enable the rudder pin to travel in a full circle. By positioning the elevator/engine control horn on its shaft and doing likewise with the rudder gear of the actuator, you can arrive at about any plan you desire.

When the rig is all hooked up, spend some time parlor flying to get the feel of the system. Once you have the hang of it. You're ready for more adventurous pursuits! ●