Double-tube pulsers have been popular, especially since we published the circuit of the one Dr. Good developed, and has used most successfully with his dual control system. Al Diem felt it ought to be possible to work somewhat the same arrangement with a *single* tube, and his version is seen on page 68. The circuit was intended for a 1R5 battery tube, but has also been very successful with type 6BE6 tubes, for use with a 6 V. heater supply. We show the 1R5 version here, and exactly the same circuit does the job with the 6BE6, but on the latter the cathode is grounded, and of course the pin connections will differ from those shown. If you compare this circuit with that presented in the January 1955 issue, you will see the similarity; C1 and C2 are the two grid condensers, but in the 1R5 circuit they must be of different values. If it is desired to change the pulse range of the circuit, these two condensers may be made larger or smaller, but they should always have a ratio of 1-4.

A new control, R4, has been added, and is necessary to set the pulse "symmetry." To get the pulser working, put R1 and R2 at the center of their ranges and turn on the power. Adjust R4 for pulse symmetry—that is, make sure the pulse rate stays the same when R1 is moved to extreme right or left. Don't omit the resistor R3; its function is to limit the range of pot R2, so that there will always be a slight positive voltage sent along to the arm of R1. If this resistor is not included, it will be found that as R2 is turned toward the ground end a point will be reached where the smooth pulse rate change ceases, and instead of dropping further, it will increase slightly, and the symmetry will fall off. You can either use a fixed resistor (R3) to prevent this, or provide a stop on the lever that controls R2.

Al says the pulser is not fussy on voltage, which means that it may be used with hand-held low power transmitters, or with those working on higher voltage from a vibrator or dynamotor B supply.

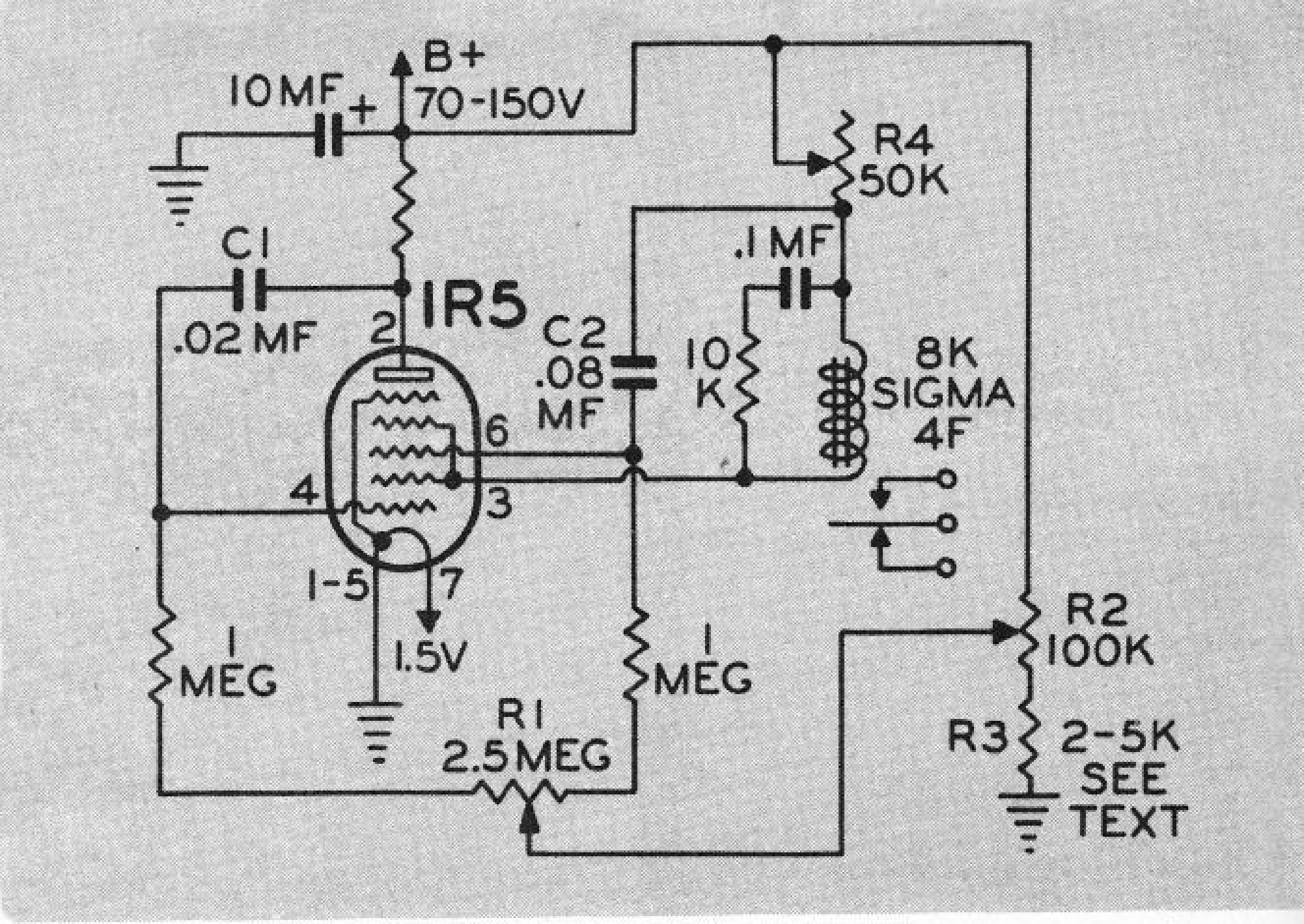

More radio control magic by Diem: dual control system pulser with single tube.

It has been brought to our attention that a vital resistance value was omitted from the circuit of the Diem dual proportional pulser—page 68 of the Jan. 1956 issue. The plate resistor should be 200,000 ohms. Al Diem also emphasizes that if this pulser (or most any other electronic pulser, for that matter) is used on old B batteries, an electrolytic condenser of about 20-40 mf. capacity should be connected from B plus to ground. It has been found that a little better action may be had if a 1N34 diode is connected across the relay winding (in addition to the .1 mf. condenser and 10K resistor); the cathode, which is indicated on these diodes by a "K" or by a straight line, should be toward the 50K Symmetry control.