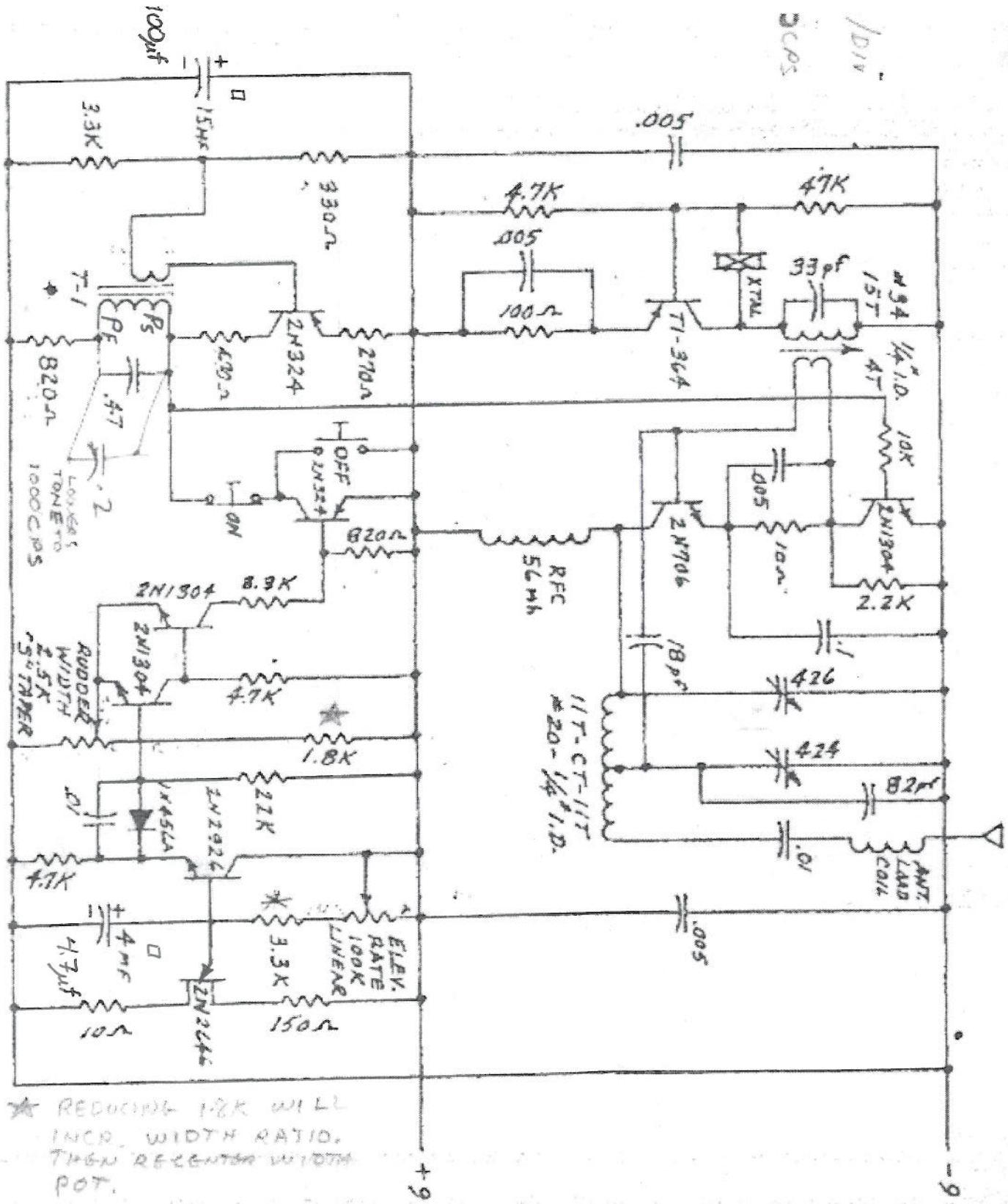

REPLACE

REDUCING 1.8K WILL INCR. WIDTH RATIO. THEN RECENTER WIDTH POT.

NOTE: T-1 HAS 2000 TURNS
PRIMARY - 350 TURNS
SECONDARY - #34 - 5/16" ID

NOTE: PULSMITE 1200S TX
T1 PRIMARY 1400 TURNS
T1 SEC. 275 "

MIN-X RADIO, INC.	
PULSE PROPORTIONAL TRANSMITTER	
"PULSMITE 800S"	
MODEL: TT-1P	DRAWN BY: G.W.R. REVISED BY: RJS

* DECREASING THIS RESISTANCE RAISES RATE