KPR-5C RECEIVER FRONT-END

R-20

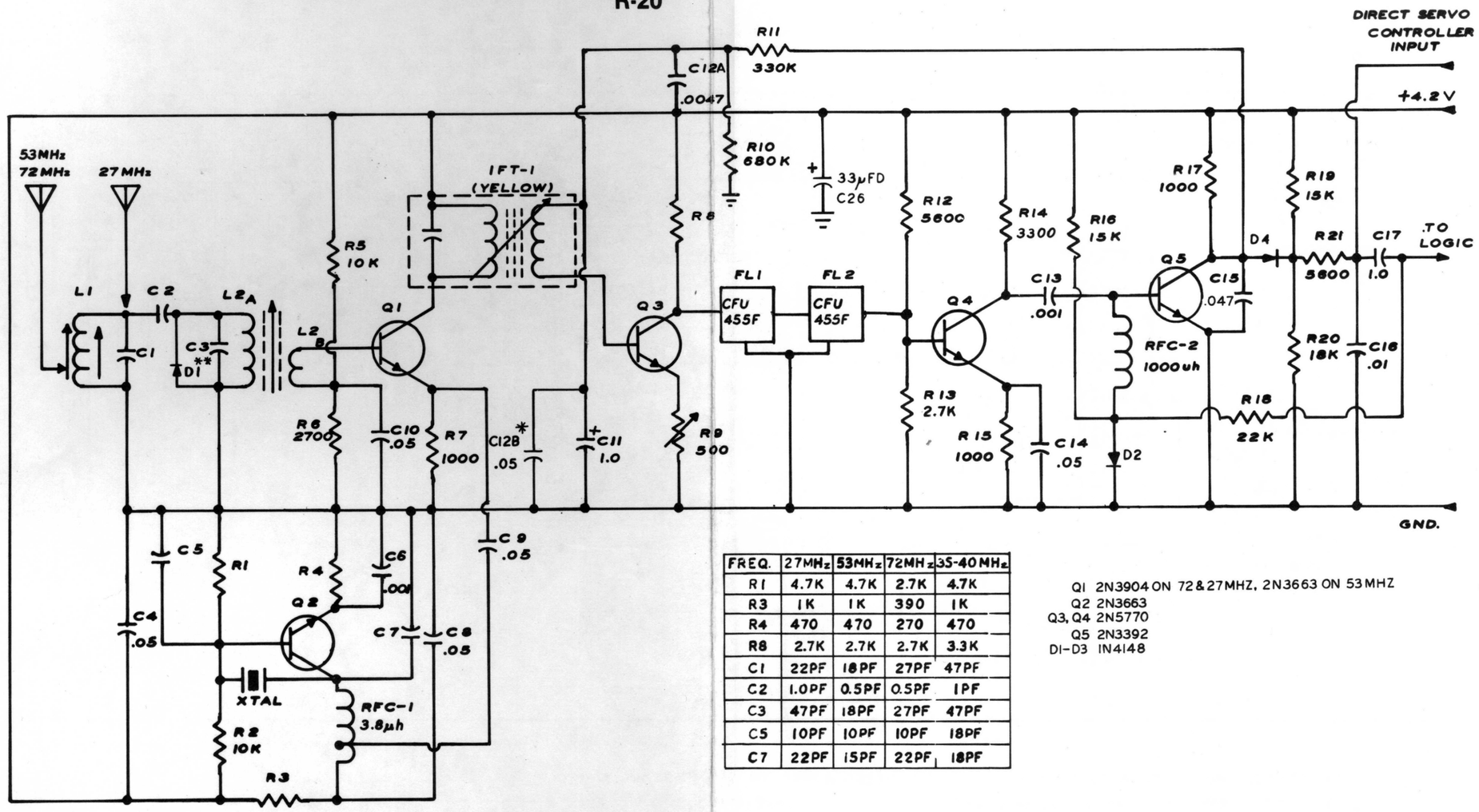

FREQ.	27MHz	53MHz	72MHz	35-40MHz
R1	4.7K	4.7K	2.7K	4.7K
R3	1K	1K	390	1K
R4	470	470	270	470
R8	2.7K	2.7K	2.7K	3.3K
C1	22PF	18PF	27PF	47PF
C2	1.0PF	0.5PF	0.5PF	1PF
C3	47PF	18PF	27PF	47PF
C5	10PF	10PF	10PF	18PF
C7	22PF	15PF	22PF	18PF

Q1 2N3904 ON 72 & 27MHZ, 2N3663 ON 53MHZ
Q2 2N3663
Q3, Q4 2N5770
Q5 2N3392
D1-D3 1N4148

* C12B ON 5 CHANNEL RECEIVERS USING R20A P.C. BOARD ONLY

** D1 PRESENT ON LATE 1977,78,79 SERIES PRODUCTION 5 CHANNEL RECEIVERS.

FIGURE 28