KRAFT SYSTEMS, INC.
1976 BICENTENNIAL SERIES

RADIO CONTROL INSTRUCTION MANUAL

THIS MANUAL IS
ALSO APPLICABLE TO
SERIES '77

THE FOLLOWING SPECIAL SECTIONS ARE DEVOTED TO THE VARIOUS KRAFT 1976 BICENTENNIAL SYSTEM COMPONENTS. BE CERTAIN TO READ ALL OF THE MATERIAL ON YOUR SYSTEM AND ALL THE SECTIONS (1 THROUGH 7) PERTAINING TO ALL KRAFT SYSTEMS AND COMPONENTS, AS WELL AS THE SEPARATE FUNDAMENTALS AND GUIDELINES FOR INSTALLATION OF YOUR KRAFT SYSTEM.

KRAFT SYSTEMS, INC.
1976 BICENTENNIAL SERIES

RADIO CONTROL INSTRUCTION MANUAL

SECTION 1

UNDERSTANDING YOUR KRAFT RADIO CONTROL SYSTEM

Your purchase of a Kraft Radio Control System places in your hands highly sophisticated electronic equipment which is the result of many years of research and product development by a dedicated group of professionals. Kraft Systems, Inc., a pioneer in the technology of radio control equipment, has attained the status of being the world's largest manufacturer of proportional radio control equipment.

We at Kraft Systems appreciate the confidence you have placed in us which prompted your purchase of our product. Please feel free to call on us any time when service or advice is required. Your goodwill is our most important asset.

Whether you are new to this great R/C sport of ours or an "oldtimer," take the time to CAREFULLY review the ENTIRE contents of this instruction manual paying special attention to the sections describing the components that comprise your system. Your Kraft System will give you successful and dependable operation if you follow the instructions, recommendations, and guidelines set forth in this manual and, of course, utilize good common sense. OBSERVE ALL WARNINGS. They are for your protection, the protection of others, and the protection of your investment in a very rewarding hobby.

Although this type of radio control equipment is usually used to operate model airplanes, boats, and cars, other applications are possible. Whatever your application, exercise care and ask us if in doubt about any aspect of your system.

Kraft Radio Control Systems utilize highly sophisticated electronic components, circuitry and design to achieve digital proportional control of moving surfaces. This means that the further you move the control stick on the transmitter, the further, proportional to the movement of the transmitter control stick, will the surface move on the model. Thus, in an airplane controlled by your Kraft System, when you move the elevator control stick slightly in either the up or down direction, the elevator surface of the model will basically move the same proportionate amount. It is this essential capability that allows realistic flying or control of other types of models.

Your Kraft System includes the following basic components:

A. A transmitter whose purpose it is to transmit the radio signals from your "hands" to the model.

B. A receiver which "receives" those signals through an antenna and divides those signals received, sending to each servo mechanism the command given through your hands by the transmitter.

C. Servo mechanisms which are attached to the receiver and accept the command from the receiver translating that command into linear or rotary motion; each servo is mechanically connected to a moving surface and thus ultimately completes the "instruction" received from your hand movement on the transmitter controls.

Ancillary to the basics described above are the following:

1. A retractable antenna which is locked into position and extended during operation from the top of the transmitter.
2. A rechargeable battery pack within the transmitter case to energize the transmitter circuits.
3. A rechargeable battery pack in the model to energize the receiver circuits and servo mechanisms.
4. An "on-off" switch on the transmitter and a similar switch for the receiver, servo, and battery components in the model. These components, the battery pack in the model, the receiver, the servos, and the "on-off" switch constitute what is called the "airborne package."
5. A meter on the transmitter which is energized when the transmitter is switched on.
6. Receptacles (jacks) on the transmitter and on the wire leads connecting to the switch harness and battery to be contained in the model for the purpose of charging the battery packs.
7. Trim levers found on the side of each transmitter control stick which are utilized to give a "fine" adjustment to the settings of the moving surfaces. These are used during flight to "trim out the model," that is, to achieve slight variations in the normally neutral settings of the transmitter controls so that the model tracks correctly.

TAKE THE TIME NOW to look at and examine each of the components just described to familiarize yourself with all components and their functions.

FURTHER INSTRUCTIONS follow in Section 4, under the heading "Unpacking and Setting Up Your Kraft System."

SECTION 2

SAFETY FIRST FOR YOURSELF, FOR OTHERS, AND FOR YOUR EQUIPMENT

"SAFETY FIRST" is more than just a slogan when operating radio controlled models. Thus, we urge, especially with respect to radio controlled aircraft that:

FOR YOUR SAFETY:

Recognize that radio controlled models are not harmless toys and can be dangerous missiles if carelessly or improperly flown. You are responsible because the reliability and safe operation of the radio equipment is largely dependent upon its proper installation and utilization.

THEREFORE, INSTALL YOUR RADIO CONTROL SYSTEM CORRECTLY AND BE CERTAIN YOU CAN FLY WELL ENOUGH TO CONTROL YOUR AIRCRAFT UNDER ALL CONDITIONS.

FOR THE SAFETY OF OTHERS:

Remember that you are responsible for the safety of all spectators and in fact, everyone that may foreseeably be injured by your model.

Do Not Fly where your model could injure any person or property.

Do Not Fly over the heads of spectators or persons in the area of your flying field. THIS INCLUDES taking off, actual flight and landing. KEEP EVERYONE, except experienced and knowledgeable persons who are assisting you in flying, away from your model even when it is on the ground and you are preparing to fly.

Do Not Fly unless and until you have an experienced instructor who has completely CHECKED OUT THE MODEL AND WILL FLY THE MODEL FOR YOU AND WITH YOU...UNTIL YOU HAVE LEARNED TO FLY COMPETENTLY BY YOURSELF. Flying (or running a boat or a model car) is a real skill

that demands patience, practice and caution. DO NOT EXPERIMENT or run RISKS: KNOW that you can fly safely before you fly alone. The real pleasures and satisfactions come from flying or operating your model with SAFETY and competence always in mind.

Do Not Fly in adverse weather conditions. Strong winds, for example, may cause loss of control of your aircraft and cause injury or damage to you or to others.

AT THE FIELD...

Do Not Fly unless your frequency is "clear." The transmitting signal frequency is shown on the transmitter and YOU MUST NOT turn on your transmitter when someone else is flying or operating their model on that same frequency. WARNING: IF YOU DELIBERATELY OR ACCIDENTALLY TURN ON YOUR TRANSMITTER WHILE ANOTHER MODEL IS FLYING OR IN OPERATION, THAT MODEL WILL GO OUT OF CONTROL. The same will happen to yours, so observe "clearing" the frequency: Only one person using a given frequency at a time. DO PURCHASE FREQUENCY FLAGS for each frequency your system uses and attach the appropriate flags to your transmitter antenna. DO OBSERVE all of the rules of the flying or operating site.

The frequencies and flag colors associated with them are as follows:

FREQUENCIES (FLAG COLORS)

27 MHz Band

26.995 (Brown)
27.045 (Red)
27.095 (Orange)
27.145 (Yellow)
27.195 (Green)

53 MHz Band

53.100 (Brown/Black)
53.200 (Red/Black)
53.300 (Orange/Black)
53.400 (Yellow/Black)
53.500 (Green/Black)

72 MHz Band

*72.080 (Brown/White)
72.160 (Blue/White)
*72.240 (Red/White)
72.320 (Violet/White)
*72.400 (Orange/White)
72.960 (Yellow/White)
*75.640 (Green/White)

*Model aircraft use only; other types of radio controlled models must use the other frequencies. Model aircraft may use all frequencies.

WARNING: THE FREQUENCIES ALLOCATED FOR RADIO CONTROL USE ARE NOT EXCLUSIVE AND ARE SHARED WITH OTHER TYPES OF USE IN CERTAIN AREAS. CHECK WITH THE FCC REGIONAL OFFICE IN YOUR AREA BEFORE OPERATING YOUR MODEL TO DETERMINE WHETHER THERE IS A POTENTIAL DANGER OF INTERFERENCE FROM OTHER USERS. THIS KIND OF "OUTSIDE" INTERFERENCE MAY CAUSE YOU TO LOSE CONTROL OF YOUR MODEL THEREBY POSSIBLY CAUSING INJURY TO YOURSELF, OR TO THE PERSON OR PROPERTY OF OTHERS.

SO REMEMBER:

1. DO NOT OPERATE your transmitter at the field until you are certain your frequency is "clear."
2. Display your frequency flag colors on the antenna of your transmitter.
3. Remember that flags do not usually state the frequency on them and sometimes the colors are hard to distinguish. Ask and be certain. If you have an eyesight limitation or defect such as color blindness for example, double check to be sure of frequency flag designations.
4. Turn your transmitter on only when you are sure no one else is using your frequency.
5. **WARNING:** Your model will go out of control and may do serious injury or damage if someone else turns on a transmitter on your frequency while you are operating your model.
6. Respect all the rules of the flying field or site.
7. At any time during the operation of your model, should you sense, feel or observe any erratic operation or abnormality, end your flight as quickly and as safely as possible. Do Not operate again until you are certain the problem has been corrected. Take no chances.

ADDITIONAL WARNING:

Radio controlled models are generally attractive, exciting and inviting in looks and performance. Therefore, realize that young persons, children and inexperienced adults may come within the operating range of the model, or that they may try to operate the equipment without understanding the dangers to that person or others. It is your responsibility to guard against unskilled and unknowing hands for their protection as well as for the safety of your equipment and model.

The key to R/C pleasure is the proper use of your Kraft System and all of the other model components. If you fail to follow instructions, heed the warnings given, misuse or abuse the system through improper operation or installation, the consequences will at least be harm or destruction of your system and may also mean injury to yourself or to the person or property of others.

AS TO YOUR EQUIPMENT:

The care you give your radio control equipment, and its correct installation and operation, are the factors that spell either safe, successful flying or injury, damage, destruction and loss. Be certain to carefully study and follow the manual on Fundamentals and Guidelines for Installation of Your Kraft System.

IN ADDITION:

The Academy of Model Aeronautics is the leading national organization made up of aircraft modeling people with headquarters in Washington, D.C. Its address is 815 Fifteenth Street, N.W. Washington, D.C. 20005, and we urge you to examine the benefits of membership including liability protection in the event of certain injuries. The Academy has adopted simple and sane rules, a few of which are especially pertinent for radio controlled flight as the OFFICIAL AMA SAFETY CODE; abide by these rules for your protection, the protection of others and your equipment. They are as follows:

1. I will not fly my model aircraft in competition or in the presence of spectators until it has been proven to be airworthy by having been previously successfully flight tested.

2. Where established, I will abide by the safety rules for the flying site I use, and I will not willfully and deliberately fly my models in a careless, reckless and/or dangerous manner.

3. I will have completed a successful radio equipment ground range check before the first flight of a new or repaired model.

4. I will not fly my model aircraft in the presence of spectators until I become a qualified flyer, unless assisted by an experienced helper.

5. I will perform my initial turn after takeoff away from the pit, spectator and parking areas, and I will not thereafter perform maneuvers, flights of any sort, or landing approaches over a pit, spectator or parking area.

NOTE: These basic safety precautions are for your safety, the safety of others, and of your equipment and APPLY TO ALL USES OF YOUR KRAFT SYSTEM (cars, boats, aircraft, etc.). Consider carefully all of what has been stated and obey all precautions as well as those appropriate to your particular use. Good common sense must also be used at all times in the operation of your equipment.

SECTION 3

FEDERAL LICENSING REQUIREMENTS & SPECIAL OPERATING STANDARDS FOR MODEL AIRPLANES

BEFORE YOU OPERATE the transmitter, you must obtain a license from the Federal Communications Commission. No test is required if operating on 27 MHz and 72 MHz but a test is required to operate on 53 MHz. It is illegal to operate any transmitter without the appropriate Federal Communications Commission license. Application forms for this license are available from the nearest office of the FCC as listed below; keep in mind that under present standards and requirements, such a license DOES NOT constitute a license to fly or otherwise operate any R/C model. Nor does it indicate you have any proficiency as a pilot of an R/C aircraft or other radio controlled model.

Below are listed the FCC Addresses where you may obtain your application, Form 505, for your Citizens Band License.

Your requests should be addressed as follows:

FEDERAL COMMUNICATIONS COMMISSION
ENGINEER IN CHARGE
(applicable street and city for your area.)

District	Address
1	1600 Customhouse, Boston, Massachusetts 02109
2	748 Federal Building, 641 Washington Street, New York, N.Y. 10014
3	1005 U.S. Customhouse, Philadelphia, Pennsylvania 19106
4	819 George M. Fallon Federal Building, Baltimore, Maryland 21201
5	870 North Military Highway, Norfolk, Virginia 23502
6	1602 Gas Light Tower, 235 Peachtree Street, N.E., Atlanta, Georgia 30303
6S	238 Federal Office Bldg. and Courthouse, P.O. Box 8004, Savannah, Georgia 31402
7	919 Federal Building, 51 S.W. First Avenue, Miami, Florida 33130
7T	738 Federal Building, 500 Zack Street, Tampa, Florida 33606
8	829 Federal Building South, 600 South Street, New Orleans, Louisiana 70130
8M	439 U.S. Courthouse and Customhouse, 113 St. Joseph Street, Mobile, Alabama 36602
9	5636 Federal Building, 515 Rusk Avenue, Houston, Texas 77002
9B	323 Federal Building, 300 Willow Street, Beaumont, Texas 77701
10	Room 13E7, 1100 Commerce St., Federal Building, Dallas, Texas 75202
11	312 North Springs St., U.S. Courthouse, Room 1754, Los Angeles, California 90012
11SD	1245 Seventh Avenue, Fox Theatre Building, San Diego, California 92101
11SP	300 South Ferry Street, Terminal Island, San Pedro, California 90731
12	323A Customhouse, 555 Battery Street, San Francisco, California 94111
13	314 Multnamah Building, 319 S.W. Pine Street, Portland, Oregon 97204
14	8012 Federal Office Bldg., 909 First Avenue, Seattle, Washington 98104
15	504 New Customhouse, 19th St. between California & Stout Sts., Denver, Colorado 80202
16	691 Federal Building, 4th & Roberts Streets, St. Paul, Minnesota 55101
17	1703 Federal Building, 601 East 12th St., Kansas City, Missouri 64106
18	1872 U.S. Courthouse, 219 South Dearborn Street, Chicago, Illinois 60604
19	1054 Federal Building, Washington Blvd. & LaFayette Street, Detroit, Michigan 48226
20	905 Federal Building, 111 W. Huron St. at Delaware Ave., Buffalo, N.Y. 14202
21	502 Federal Building, P.O. Box 1021, Honolulu, Hawaii 96808
22	U.S. Post Office and Courthouse, Room 322, 323, P.O. Box 2987, San Juan, Puerto Rico 00903
23	U.S. Post Office Building, Room G63, 4th & G St., P.O. Box 644, Anchorage, Alaska 99510
24	Room 216, 1919 M. Street, N.W., Washington, D.C. 20554

Additionally, the Federal Aviation Administration has announced guidelines for operation of model aircraft. We are reprinting those guidelines here and encourage your study and cooperation.

1. Purpose: This advisory circular outlines safety standards for operators of model aircraft, and encourages voluntary compliance with these standards.

2. Background: Attention has been drawn to the increase in model aircraft operations, and the need for added caution in the case of free-flight and radio controlled types to avoid creating a noise nuisance or a potential hazard to full-scale aircraft and persons and property on the surface.

3. Operating Standards: Modelers, generally, are concerned about safety and do exercise good judgment when flying model aircraft. However, in the interest of avoiding undue criticism from affected communities and airspace users, COMPLIANCE WITH THE FOLLOWING STANDARDS IS ENCOURAGED BY OPERATORS OF RADIO CONTROLLED AND FREE-FLIGHT MODELS.

   a. Exercise vigilance for full-scale aircraft (get other people to help if possible) so as not to create a collision hazard.

b. Select an operating site at a sufficient distance from populated areas to avoid creating a noise problem or a potential hazard.

c. Do not fly higher than 400 feet above the surface.

d. Do not operate closer than three miles from the boundary of an airport unless permitted to do so by the appropriate air traffic control facility in the case of an airport for which a control zone has been designated, or by the airport manager in the case of other airports.

e. Do not hesitate to ask for assistance in complying with these guidelines at the airport traffic control tower, or air route traffic control center nearest the site of the proposed operations.

Director, Air Traffic Service
Federal Aviation Administration
Washington, D.C.

Under Section 3, SAFETY, we encouraged your participation in the Academy of Model Aeronautics as a member. Many flying fields require that you be a member of the Academy of Model Aeronautics before they will allow you to use their field. They want to know that all pilots are knowledgeable concerning the AMA SAFETY CODE and through membership have the liability insurance.

SECTION 4

UNPACKING AND SETTING UP YOUR KRAFT SYSTEM

The packaging of your Kraft Radio Control System was especially designed for the safe transportation and storage of the components. DO NOT DISCARD THESE CONTAINERS as they can be used for storage or returning equipment for repair. Retain the Kraft Inspection Sheets in the box; if your equipment needs repair, these should be returned with the unit.

We recommend the following procedure to familiarize yourself with the components of your Kraft System and as preparation for installation in your model:

1. Remove the transmitter from the packing box.

2. Insert the transmitter plug-in R.F. module as follows:

KPT-3C and KPT-5C transmitter models

a. Check to be sure the ON-OFF switch is in the OFF position.

b. Remove the 4 black sheet metal screws that hold the transmitter back on.

c. Remove the back cover from the transmitter.

d. Insert the plug-in R.F. module making sure the locking tab is toward the front of the transmitter and is engaged.

e. Place the frequency designation plate on the transmitter back cover.

f. Install back cover on the transmitter.

g. Affix frequency flags to transmitter (Not supplied).

KPT-7C and KPT-7CS transmitter models

a. Insert plug-in R.F. module in the top of the transmitter (See Fig. 9), pressing down firmly to make sure it is seated properly in its housing and that there is no gap between the module flange and the housing.

b. Affix frequency flags to the transmitter (Not supplied).

3. Switch on the transmitter; note the movement of the meter indicating that a radio frequency (R.F.) is being transmitted. (Note: If your transmitter is a KPT-7C or KPT-7CS, the R.F. METER IS TO THE RIGHT OF THE DUAL METER). The R.F. indicator meter provides a relative indication of the transmitter output. It does not, however, give an accurate indication and is not a basis for comparing performance between transmitters. You should note where the needle moves AFTER the transmitter battery pack has been completely charged and the antenna fully extended. This reading will be generally maintained during utilization of your transmitter. If the reading changes substantially in the future, it may indicate a drop-off in performance and should be checked by the factory or an authorized repair station.

REMEMBER THAT A TRANSMITTER WHOSE PERFORMANCE HAS DROPPED MAY FAIL TO SEND THE SIGNALS NECESSARY TO ADEQUATELY AND SAFELY CONTROL THE MODEL, RESULTING IN A POSSIBLE CRASH.

CAUTION: IF NO MOVEMENT IS NOTED ON THIS METER WHEN YOU TURN THE TRANSMITTER SWITCH ON, THE BATTERY PACK WITHIN THE TRANSMITTER IS MORE THAN LIKELY DISCHARGED. CHARGE THE BATTERIES AS OUTLINED UNDER SECTION 5, "BATTERY CHARGING."

4. Switch off the transmitter; remove all of the other components from the packing box containing your Kraft Radio Control System.

5. If you have a KPR-7C or KPR-7CD receiver, attach the plug-in R.F. module as follows:

a. The receiver should not be connected to the power source (battery pack) at this point.

b. Plug the R.F. module into the receiver (See Fig. 12). Be sure the module is seated firmly and that no gap appears between the module and the receiver case.

6 A series of diagrams accompanies these pages. Select the diagram which shows how to connect the components of your System together. At this point, your objective is to get the system operating on your work bench or table area. Once connected, you must then refer to the corresponding diagram for your System showing the transmitter control stick (or sticks) functions. TAKE THE TIME TO LEARN THE NAMES OF ALL COMPONENTS YOU ARE GOING TO CONNECT AND TO IDENTIFY ALL OF THE TRANSMITTER CONTROL STICK(S) FUNCTIONS AND NAMES ATTACHED TO THOSE FUNCTIONS.

Note the following at this point:

a. If your Kraft System uses separate servos (as opposed to a receiver-servo block system where the receiver and the servos are in one block) it is of no consequence at this point which servo you plug into which function since your aim is simply to learn and see how the system operates on your bench. NOTE: Figure 11 shows the correct sequence for the insertion of servos in your system.

b. The connectors on your Kraft System are rugged but should be handled with care. Note that there are four socket contacts with one of these spaced further from the other three except for the socket connector leading from the receiver (airborne) battery and switch harness which has a different style connector.

c. Do not attempt to force the servo plugs into the receiver; line each plug up properly and it will move into place. The same is true of the plug leading from the receiver

battery pack and switch harness. Note that there is a plastic lip that extends over the inserted plugs and prevents the plugs from coming loose while inserted.

d. **CAUTION:** When removing the servo connectors from all receivers (other than those using the receiver-servo block system) use a finger to bend back this plastic lip for easy and safe removal of the connectors.

7. Once you have followed the diagrams for connecting the airborne package of your particular Kraft System and you have studied and understood all of the components as well as having studied and understood the diagram illustrating the transmitter control stick functions, you are ready to energize the System and study its actual functioning.

8. Switch on the transmitter; then switch on the airborne package. The System is now energized. There may be some movement in the servos even though you have not moved the transmitter sticks. This is normal.

9. Now follow the diagram indicating the transmitter's control functions by moving each stick and watching the reaction of the servo or servos. Move the small black trim levers and note the slight servo movements. Keep these all centered through the installation of your System in your model. They will be used in actual flight or operation of the model to adjust servo position slightly...a process called "trimming." If the airborne system fails to operate, charge the battery pack as outlined in the Battery Charging Section of this INSTRUCTION MANUAL.

10. Switch off the receiver; then switch off the transmitter. Get used to this sequence: When turning the System off, turn the receiver off first, then the transmitter. When turning the System on, the proper sequence is to turn on the transmitter, then the receiver.

SECTION 5

BATTERY CHARGING

THE FAILURE TO FOLLOW THESE INSTRUCTIONS WILL CAUSE THE RADIO CONTROL EQUIPMENT TO PERFORM POORLY OR IMPROPERLY, CAUSING MODEL OPERATION FAILURE. THIS MAY RESULT IN SERIOUS PHYSICAL HARM TO OTHERS, YOURSELF, OR PROPERTY DAMAGE.

All Kraft Bicentennial Series Systems have rechargeable nickel-cadmium ("Ni-Cad") battery packs in both the transmitters and airborne systems. NOTE CAREFULLY these procedures for charging the batteries:

1. The KBC-B battery charger plugs into a regular 110 volt alternating current (110 VAC-60Hz) wall outlet. This charger is permanently sealed and is U.L. Approved. It has been set at the factory for a high rate of charging. CAUTION: If you own a Kraft Radio Control System carrying a designation of "Series Seventy-One" or earlier, you should not use this charger; if you do, you will cause cell damage to the ni-cad packs due to the high rate of charge.

2. **WARNING:** Before the initial use of your completed model, charge the batteries using the KBC-B charger for at least 12 hours. Do not be concerned about over charging the batteries because the charger output has been adjusted to permit continuous charging without damaging the batteries.

3. After the initial 12-hour charge, the battery pack(s) should be recharged for at least 6 hours before each flying or use session REGARDLESS of whether the system has been operated since the last full charge. WHEN IN DOUBT, return to a 12-hour charge before flying or operating the model. REMEMBER, the failure to fully charge batteries prior to each flying session or operation of the model may result in the model becoming unreasonably dangerous to fly or operate and thereby, the model may go out of control causing potential personal injury to others or to yourself as well as property damage.

4. The transmitter and receiver battery packs may be charged simultaneously or independently. It is not necessary to remove the battery pack from your model. Charge as follows (Fig. 1):

   a. Transmitter and receiver switches must be in the OFF position; failure to turn these switches off may result in the lack of any charging taking place and/or damage to the battery pack(s).

   b. Insert the transmitter charge plug into the transmitter charge receptacle on the bottom of the transmitter.

   c. Plug the charger into the normal home wall outlet (110VAC-60Hz). The transmitter indicator lamp (one of two on the charger) should glow. If it does not, recheck to make certain that the transmitter switch is in the OFF position.

   d. Insert the charger plug into the switch harness charge receptacle which is wired into the switch harness. The receiver indicator lamp (one of two on the charger) should glow. If it does not, recheck to make certain that the receiver switch is in the OFF position.

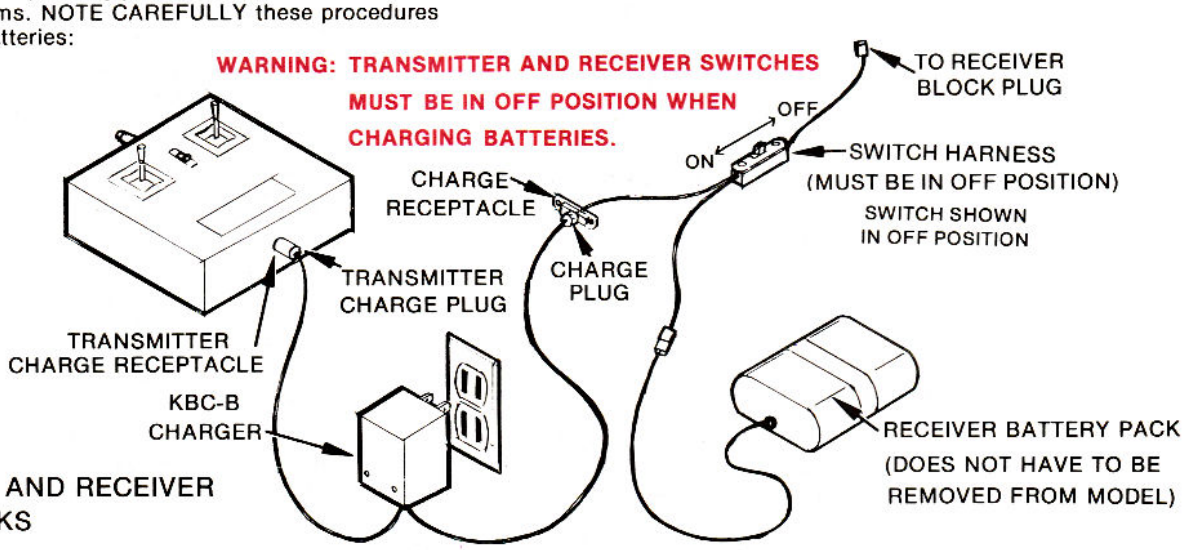

FIGURE 1

TRANSMITTER AND RECEIVER BATTERY PACKS

e. To take battery packs off charge, simply remove the charge plugs from the transmitter and receiver receptacles; then remove the KBC-B charger from the A.C. outlet.

NOTE: It is recommended that the batteries be charged every two to three weeks whether the batteries have been used or not since the last full charge. Failure to do so could damage them permanently.

An optional KBC-A 12 volt charger is available for charging your ni-cad battery packs from a 12 volt car battery. Follow the instructions included with the unit.

Since the battery packs cannot be damaged by "over charging," it is advisable to charge both of them the full 6 hours recommended in paragraph three even if one battery pack has had more use or drain than the other. You are then sure of a full charge before operating your model.

The length of time the batteries will safely operate the radio equipment after a full charge can vary and available flight time can go down rapidly if, for example, a servo motor is stalled. The amount of battery drain also depends on your equipment installation, flying habits, etc. Therefore, FROM A SAFETY STANDPOINT, CONSIDER ONE HOUR OF USE AS THE MAXIMUM TIME LIMIT ON A FULL CHARGE. Remember also that any time your transmitter or receiver switches are "on," it is draining your batteries and should be included in calculating battery time used.

SECTION 6

LEARNING TO USE YOUR KRAFT SYSTEM

FOR SAFE AND SUCCESSFUL OPERATION OF YOUR RADIO CONTROL MODEL, IT IS IMPORTANT TO CAREFULLY FOLLOW THE INSTRUCTIONS BELOW AND OBTAIN TRAINING IN THE OPERATION OF YOUR MODEL FROM A WELL EXPERIENCED INDIVIDUAL.

At this point, having followed all of the instructions, directions and guidelines contained in the earlier sections of this manual and having completed your model and installed your Kraft System observing the directions and guidelines contained in the separate manual entitled "FUNDAMENTALS AND GUIDELINES FOR INSTALLATION OF YOUR KRAFT SYSTEM," we present here general instructions concerning the process of learning to use your Kraft System. Most of what is stated is directed toward those using their System in a powered model aircraft. The basic precautions and directions are, however, applicable to any radio controlled model use, e.g. gliders, boats, or cars.

It should be re-emphasized that before you make initial use of your completed model, you should have one or more persons who are thoroughly experienced in the field of radio controlled modeling completely go over the model prior to your use to make certain you have properly installed your Kraft System and followed all of the directions given in this manual as well as the installation manual. We recommend that the individual(s) who are "checking out" your model be shown these two manuals and that you and they review all of the materials contained in them to make certain that you have followed all directions and guidelines and understand the warnings that have been given. This should be done even if you are obtaining flight training from experienced and competent flyers.

PRE-FLIGHT INSTRUCTIONS

1. Be certain that the receiver battery pack has been fully charged. Refer to directions given in the Battery Charging Section of this Instruction Manual.
2. Make certain that all surfaces or controls operate in the proper direction as related to the transmitter controls. A GREAT NUMBER OF MODELS HAVE BEEN CRASHED BECAUSE OF REVERSED CONTROLS.
3. Move each of the trim levers to make certain that they are giving the necessary slight additional deflection in the moving surfaces.
4. Make certain your frequency is clear (Refer to Section 2 of this Instruction Manual).
5. Complete an "antenna off" ground range check in order to gain a relative indication of the airborne range of your model. ("Antenna off" range means the range obtained with the antenna removed if you have a KPT-3C or KPT-5C transmitter or the antenna retracted and disengaged if you have a KPT-7C or KPT-7CS transmitter.) This must be performed in an open area, clear of all obstructions, power lines, metal fences, buildings, etc. Remember to "clear" your frequency before turning on your transmitter. (Refer to Section 2 of this Instruction Manual.)
6. Remove or retract the transmitter antenna; switch on the transmitter and then the receiver. Activate an easily visible control surface (such as the rudder of your model) while you slowly back away from your model. As you back away there may be spots where the control response is somewhat intermittent. This may happen well before maximum "antenna off" range is attained. This is normal and should not be considered as a sign of equipment malfunction. Be certain, however, that the "antenna off" range exceeds 8 feet if your System is on the 27 MHz frequencies; 25 feet if on the 72 MHz frequencies; and 15 feet if on the 53 MHz frequencies.

   You should easily achieve the above minimums, if not, do not attempt to operate the model. Recheck the entire installation with particular attention to the airborne wiring and receiver antenna installation. REMEMBER, DO NOT OPERATE THE MODEL UNTIL THE MINIMUM RANGE HAS BEEN OBTAINED.
7. Repeat this "antenna off" test with the engine of the model running through its entire speed range. IT IS IMPERATIVE THAT YOU HAVE ASSISTANCE IN HOLDING THE MODEL WHILE THIS TEST IS BEING MADE. If during this test, the "antenna off" range materially decreases, some part of your model's mechanical system may be causing and creating excessive electrical noise. This may be the result of loose engine mounts, out of balance propellers, etc., creating so much vibration that even the high vibration resistance of the System may be exceeded. Vibration must be kept to a minimum for long System life. Keep in mind that vibration is an enemy of your radio control airborne system and that the safe and long life of your System depends upon minimizing vibration.

WARNING: IF ANY OF THE ABOVE DESCRIBED TESTS DO NOT MEET THE STANDARDS STATED, DO NOT ATTEMPT FLIGHT. DO NOT TAKE ANY CHANCES IF YOU ARE IN DOUBT. ATTEMPTING TO FLY A MODEL WHICH HAS NOT BEEN THOROUGHLY PRE-FLIGHT TESTED MAY RESULT IN AN ACCIDENT CAUSING SERIOUS PHYSICAL INJURY TO YOURSELF AND TO OTHERS AS WELL AS CAUSING SERIOUS PROPERTY DAMAGE.

FIRST FLIGHT

IF YOU HAVE NOT FLOWN A RADIO CONTROLLED MODEL AIRPLANE PREVIOUSLY, ALLOW AN EXPERIENCED, COMPETENT FLYER TO CHECK OUT YOUR AIRCRAFT AND ASSIST YOU.

1. The first flight of a radio controlled model aircraft is usually the most crucial flight. At this point, you should have carefully pre-flight checked the system. Now take the time to make trim adjustments in the air for proper flight. This is usually referred to as "trimming out" the aircraft.

   Most flying clubs have experienced and competent members who can assist in the proper first flight of the aircraft and who are willing to give you the instruction and help necessary to make your entry into R/C flying as trouble-free as possible. It is not difficult to learn the basics of flying but each individual learns at a different pace and it must be remembered that even slow-moving models can demand quick decisions that only experience can provide. The names and addresses of local club members may be obtained at your dealer or from the Academy of Model Aeronautics, 815 Fifteenth Street, N.W., Washington, D.C. 20005.

2. Once again, review Sections 2 and 3 of this Manual.

3. Be certain that the transmitter antenna has been fully extended.

4. Note that the transmitter antenna radiation pattern from the tip of the antenna is very low. FOR THIS REASON DO NOT POINT THE ANTENNA DIRECTLY TOWARD THE AIRCRAFT DURING FLIGHT. (Figure 2)

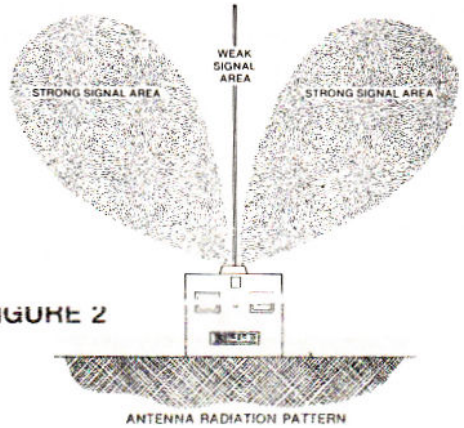

FIGURE 2

ANTENNA RADIATION PATTERN

5. After each flight, turn off the airborne system and then the transmitter.

6. Collapse the antenna to minimize interference should your transmitter be accidentally left turned on.

7. If the control surfaces (elevator, ailerons, etc.) have been adjusted in flight by use of the trim levers on the transmitter, the control surfaces should be adjusted so that these levers are returned to their neutral position before the next flight.

PRIOR TO EACH SUCCESSIVE FLIGHT

Before each operation or flight of your model you must minimally do the following to insure safe operation of your model:

1. Make certain that your batteries are adequately charged for the next flight.

2. Visually inspect all aspects of your model; in the case of an aircraft, start with the propeller and move to the rudder. Is anything loose? Is everything in alignment?

3. Inspect all moving surfaces carefully to make certain that they are secure.

4. Make certain that you have properly fueled your model.

5. Make certain that you have "cleared" your frequency.

6. Turn on your transmitter and then your airborne unit and move through all functions of your transmitter making certain that all surfaces operate correctly. In other words, check to see that "right movement" of the aileron control stick means "right aileron up," when standing behind the model, and that pulling back on the elevator stick moves the elevators on the aircraft "up," etc.

7. Start your engine and repeat a thorough check-out of all moving surfaces at different speeds of the engine (IT IS IMPERATIVE THAT YOU HAVE ASSISTANCE IN HOLDING THE MODEL WHILE THESE TESTS ARE BEING MADE).

8. Perform all other tests recommended by the model kit or engine manufacturer.

9. Extend the antenna completely.

It is a wise precaution to inspect the airborne system after three or four flights, and certainly at the end of your flying session, in order to make certain that all aspects of your airborne installation are in proper working order.

SECTION 7

WHEN YOU NEED REPAIRS

Please follow these instructions for returning equipment to the factory or to one of the Authorized Service Centers for repair.

1. Write a brief but thorough explanation of difficulties encountered and service required. Enclose the letter and the inspection sheet that was packed with your system in an envelope. Tape the envelope to the back of your transmitter. Although we are at your service to discuss problems by telephone, a written description must always be included with equipment returned for repair.

2. Except for problems confined to individual servos, return the complete system even if you suspect only one part is at fault.

3. When returning servos, battery packs, etc., without the transmitter, please include the serial number of your set in your letter to enable us to determine if your equipment is under warranty.

4. Completely separate the system from your installation. Do not send the receiver taped in foam, servos mounted on trays, etc.

5. If connecting plugs have been changed or other modifications made which interfere with factory check procedures, such changes will be returned to factory standards at your expense.

6. Fully charge batteries prior to shipment. This not only expedites repair but also provides our technicians with a good check on the condition of your battery packs. Indicate the date you charged the batteries in your letter.

7. Disconnect the receiver battery pack and be sure the transmitter switch is in the "off" position.

8. Carefully pack all components individually with sufficient packing material to avoid shipping damage. It is a good idea to save the original component boxes and foam packing material to return equipment for repair. As an alternate packing method, all components must be individually wrapped in shock absorbent material and packed in a manner that prevents movement in the box.

9. Be sure to include your full return address and zip code inside box as well as outside.

10. INCLUDE A PACKING LIST OF ALL ITEMS RETURNED AND MAKE SURE THEY MATCH THE LIST.

11. Insure the package. You are responsible if the package is lost or damaged.

12. We recommend using United Parcel Service whenever possible to send your equipment to us or to our Authorized Service Centers.

13. IF YOU ARE RETURNING A REPAIR TO THE FACTORY FROM A COUNTRY OUTSIDE THE UNITED STATES, PLEASE BE SURE TO READ THE SEPARATE INSTRUCTIONS INCLUDED WITH THE UNIT.

NOTICE

THE FOLLOWING SPECIAL SECTIONS ARE DEVOTED TO THE VARIOUS KRAFT 1976 BICENTENNIAL SYSTEM COMPONENTS. BE CERTAIN TO READ ALL OF THE MATERIAL ON YOUR SYSTEM AND ALL THE SECTIONS (1 THROUGH 7) PERTAINING TO ALL KRAFT SYSTEMS AND COMPONENTS, AS WELL AS THE SEPARATE FUNDAMENTALS AND GUIDELINES FOR INSTALLATION OF YOUR KRAFT SYSTEM.

TRANSMITTERS

All Bicentennial Series transmitters are formed from heavy gauge vinyl clad aluminum. They incorporate rechargeable 9.6 volt, 550 MAH high rate battery packs, plug-in Radio Frequency (R.F.) modules, plug-in modular encoders, and new open gimbal stick assemblies. Additionally, the KPT-7C and the KPT-7CS feature a triple use meter that reads R.F. and also transmitter and receiver battery voltage. (See Figs. 3, 4, 5, and 6.) The battery voltage check meter is explained on page 14.

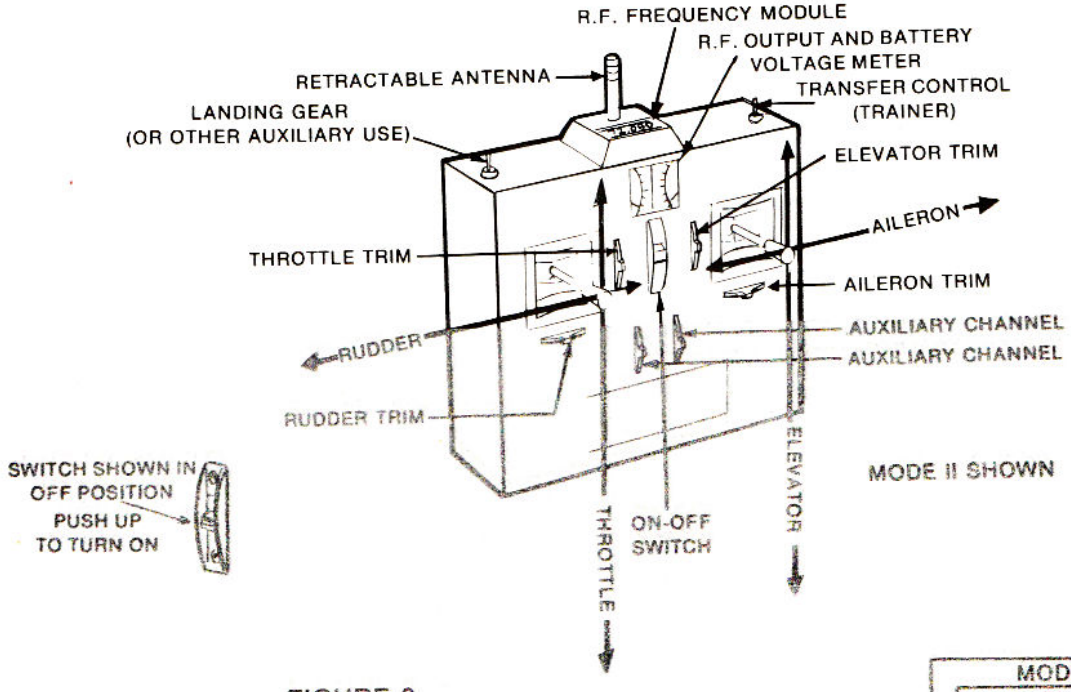

FIGURE 3
KPT-7C TRANSMITTER

MODE CHART	LEFT STICK	RIGHT STICK
MODE I	RUDDER ELEVATOR	AILERON THROTTLE
MODE II	RUDDER THROTTLE	AILERON ELEVATOR

CHANGING MODES

Write the factory for detailed instructions.

FIGURE 4

KPT-7CS TRANSMITTER

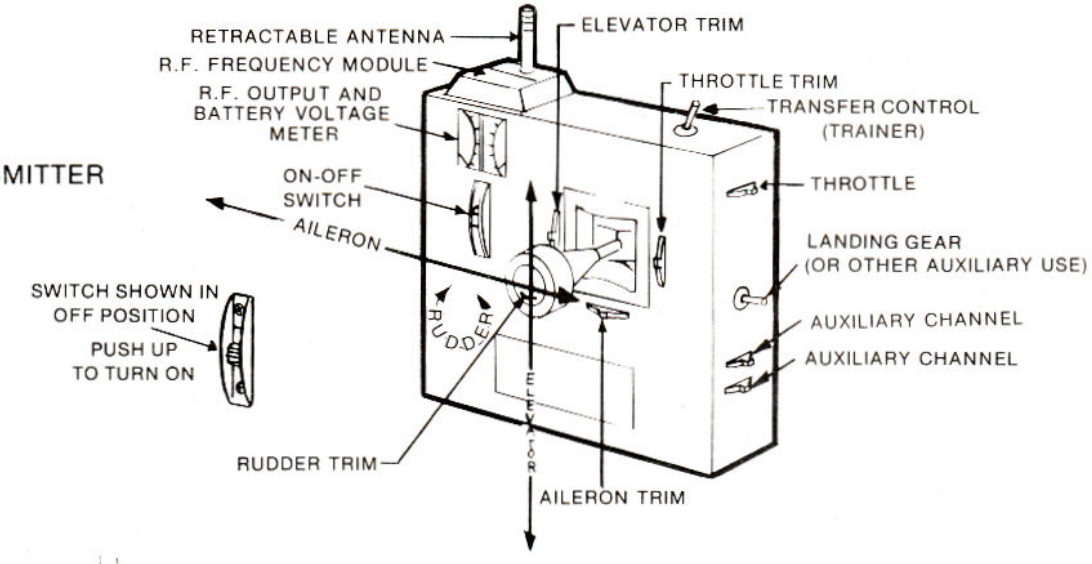

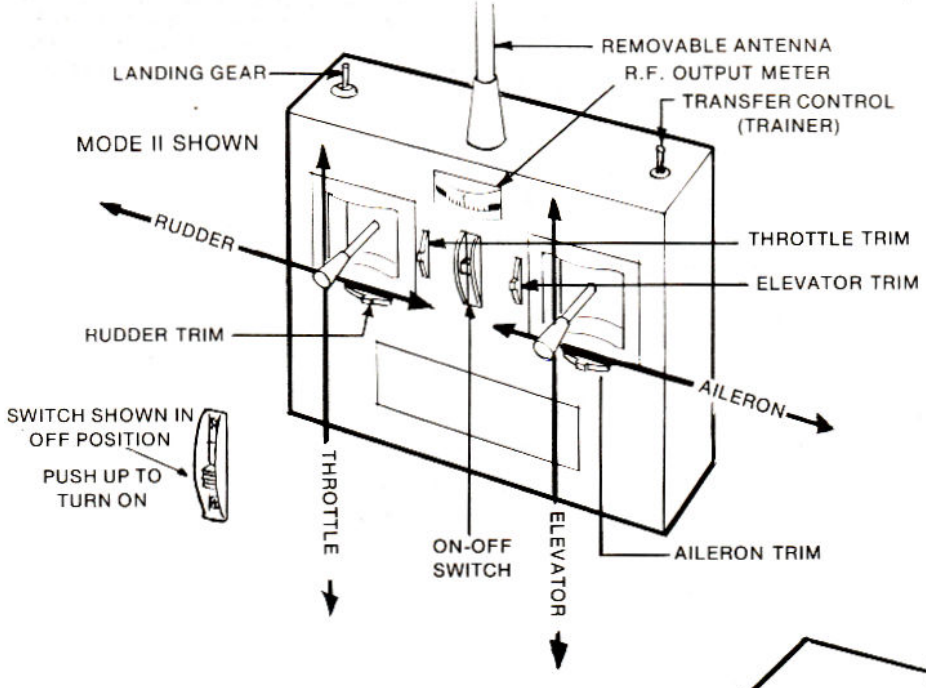

FIGURE 5

KPT-5C TRANSMITTER

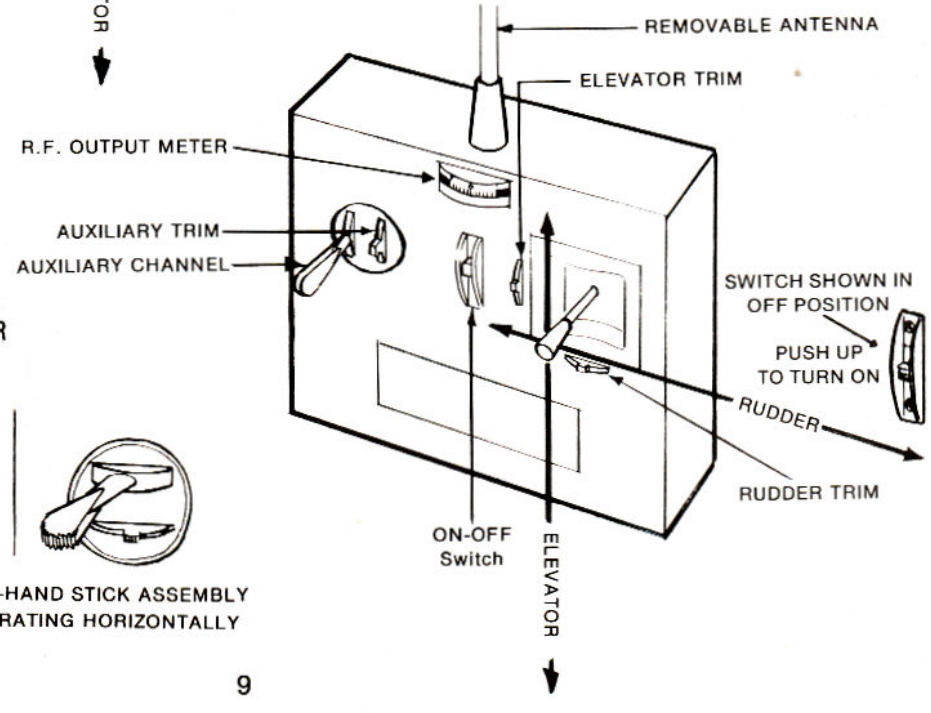

FIGURE 6

KPT-3C TRANSMITTER

LEFT-HAND STICK ASSEMBLY OPERATING HORIZONTALLY

The trainer system is standard on the KPT-7C and the KPT-7CS transmitters, (See page 15), and is optionally available on the KPT-5C.

When you switch on the transmitter, you will note a movement of the meter indicating that a Radio Frequency (R.F.) is being transmitted. (Note: If your transmitter is a KPT-7C or KPT-7CS, the R.F. METER IS TO THE RIGHT OF THE DUAL METER.) The R.F. indicator meter provides a relative indication of the transmitter output. IT DOES NOT, HOWEVER, GIVE AN ACCURATE INDICATION AND IS NOT A BASIS FOR COMPARING PERFORMANCE BETWEEN TRANSMITTERS. You should note where the needle moves AFTER the transmitter battery pack has been completely charged and the antenna fully extended. This reading will be generally maintained during utilization of your transmitter. If the reading changes substantially in the future, it may indicate a drop-off in performance and should be checked by the factory or an authorized repair station.

RETRACTABLE ANTENNA

(KPT-7C and KPT-7CS only)

IT IS VERY IMPORTANT TO BE CERTAIN THAT THE ANTENNA IS ENGAGED AND FULLY EXTENDED BEFORE FLYING, otherwise R.F. radiation will be severely reduced and loss of control may result. To engage the antenna, pull the body of the antenna outward and turn the main section in a counterclockwise direction until firm pressure is felt against the treads. DO NOT OVERTIGHTEN THE ANTENNA. When the antenna is retracted into the case, it is completely disconnected and R.F. radiation is very low. This eliminates possible interference with other radio control systems, should the switch be left on accidentally.

REMOVABLE ANTENNA

(KPT-3C and KPT-5C)

Insert the antenna into the antenna post and rotate slowly in a clockwise direction until firm pressure is felt against the threads. The antenna should only be snug, DO NOT OVERTIGHTEN.

STICK LENGTH ADJUSTMENT

To adjust the stick length, simply loosen the 4-40 Allen head set screw on the bottom side of the stick tip, set the desired length, then tighten the set screw. The stick can be adjusted a total of 13/32".

TRANSMITTER RADIO FREQUENCY MODULES

Enhanced flexibility is present in all Kraft transmitters as they use changeable radio frequency (R.F.) modules. The modules allow you to change the operating frequency of your transmitter with ease.

CAUTION: IT IS CRUCIAL THAT THE RECEIVER BE ON THE SAME FREQUENCY THAT THE TRANSMITTER IS ON; FOR EXAMPLE, IF THE TRANSMITTER MODULE IS OPERATING ON 72.240 MHZ, THE RECEIVER MUST ALSO BE ON 72.240 MHZ.

FAILURE TO OBSERVE THIS CAUTION COULD RESULT IN SOMEONE ELSE CONTROLLING YOUR MODEL AND YOU HAVING NO CONTROL OVER IT. SERIOUS PHYSICAL HARM TO YOURSELF, TO OTHERS OR PROPERTY DAMAGE MAY RESULT. DOUBLE CHECK AGAIN TO BE CERTAIN THAT THE TRANSMITTER AND RECEIVER FREQUENCY MODULES ARE THE SAME AND THAT THE MODULES ARE INSTALLED CORRECTLY.

CHANGING TRANSMITTER R.F. MODULES

(KPT-7C and KPT-7CS)

1. Pull the R.F. module out of the antenna post assembly by using thumb and index fingers (Fig. 7).
2. Insert new module and press down firmly making sure it is seated properly in its housing, i.e., no gap between the module flange and the housing.
3. Change transmitter frequency flags to new operating frequency.
4. Make sure the receiver is on the same operating frequency.

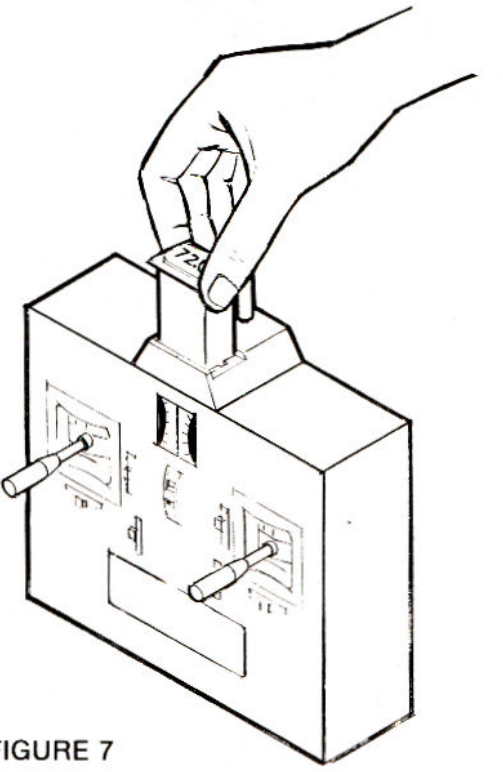

FIGURE 7

KPT-7C AND KPT-7CS TRANSMITTERS

CHANGING TRANSMITTER R.F. MODULES

(KPT-3C and KPT-5C only)

1. Check to be sure the ON-OFF switch is in the OFF position.
2. Remove the 4 black sheet metal screws that hold the transmitter back on.
3. Remove the back cover from the transmitter.

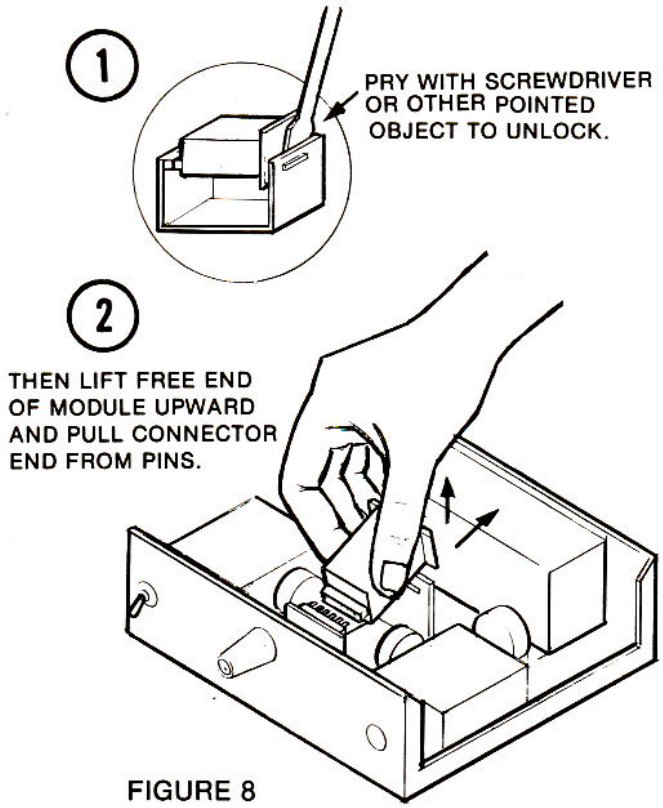

FIGURE 8

CHANGING R.F. MODULES IN KPT-3C OR KPT-5C TRANSMITTERS

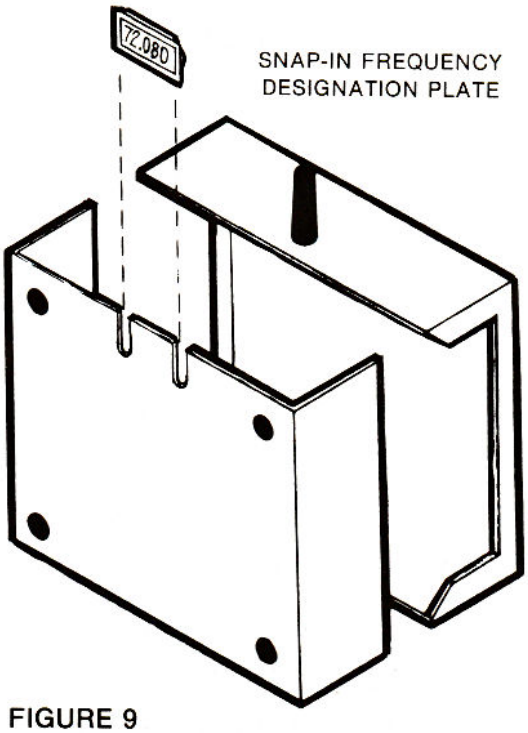

FIGURE 9

4. Insert a small screwdriver or other pointed object between the R.F. module and locking bracket. (Fig. 8)
5. Gently pry with the screwdriver to unlock the module from the bracket.
6. Lift free end of module away from the transmitter and pull downwards to unplug connector.
7. Insert new module making sure the locking tab is toward the front of the transmitter and that it is engaged.
8. Change the snap-on frequency designation plate on the transmitter back cover to the proper operating frequency (Fig. 9)
9. Install back cover on the transmitter.
10. Change transmitter frequency flags to new operating frequency.
11. Make sure the receiver is on the same operating frequency.

CHANGING LEFT-HAND STICK ASSEMBLY TO WORK HORIZONTALLY

(KPT-3C only)

1. Remove the 4 sheet metal screws that hold the transmitter back on.
2. Remove the 4 sheet metal screws that hold the left hand stick assembly in the transmitter.
3. Rotate the stick assembly clockwise 90°.
4. Secure the stick assembly in the transmitter with the 4 sheet metal screws.

NOTE: This stick can be made to operate as a positionable control by simply removing its centering spring. This is accomplished by first removing the back cover, then removing the spring. Tighten the 2 clutch screws until the desired friction is obtained on the stick (Fig. 10).

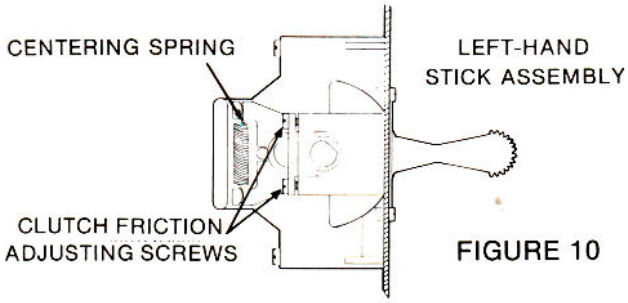

FIGURE 10

RECEIVERS

The KPR-5C, KPR-7C and KPR-7CD Bicentennial Series receivers employ low current drain I.C. decoders, and also a solid state crystal filter I.F. front end which provides selectivity for rejection of strong adjacent channel interference.

These receivers are internally wired for use with the optional direct servo controller.

The block plug diagrams (Fig. 11) show the appropriate position on the plug for each channel.

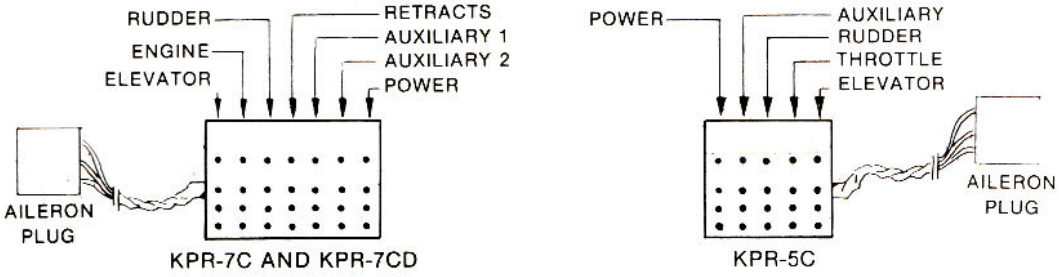

RECEIVER BLOCK PLUGS

FIGURE 11

CHANGING RECEIVER R.F. MODULES

(KPR-7C and KPR-7CD only)

Enhanced flexibility is present in the KPR-7C and KPR-7CD receivers as they use changeable radio frequency (R.F.) modules. The modules allow you to change the operating frequency of your receiver with ease.

IT IS CRUCIAL THAT THE SAME FREQUENCY MODULE BE PLACED IN THE RECEIVER AS IS IN THE TRANSMITTER; FOR EXAMPLE, IF THE TRANSMITTER MODULE IS OPERATING ON 72.240 MHZ, THE RECEIVER MODULE MUST ALSO BE ON 72.240 MHZ.

FAILURE TO OBSERVE THIS CAUTION COULD RESULT IN SOMEONE ELSE CONTROLLING YOUR MODEL AND YOU HAVING NO CONTROL OVER IT. SERIOUS PHYSICAL HARM TO YOURSELF, TO OTHERS OR PROPERTY DAMAGE MAY RESULT. DOUBLE CHECK AGAIN TO BE CERTAIN THAT THE TRANSMITTER AND RECEIVER FREQUENCY MODULES ARE THE SAME AND THAT THE MODULES ARE INSTALLED CORRECTLY.

1. Be sure there is no power going into the receiver. The switch should be OFF or the receiver disconnected from the battery pack.
2. Gently pull the R.F. module off the receiver and then plug another module on. (Fig. 12).

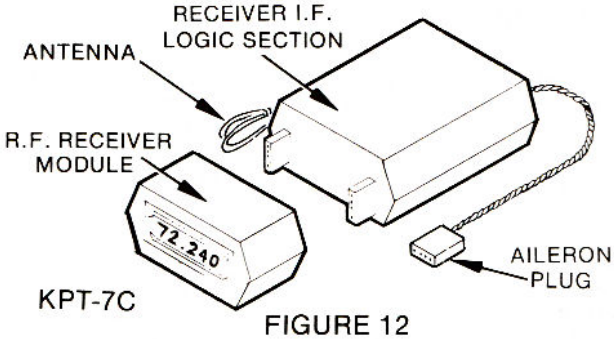

FIGURE 12

3. The module should be seated firmly on the receiver with no gap between the module and the receiver case.
4. Check and be sure the transmitter is on the same operating frequency as the module you have just installed in the receiver.

Figure 13 shows a typical receiver hook-up.

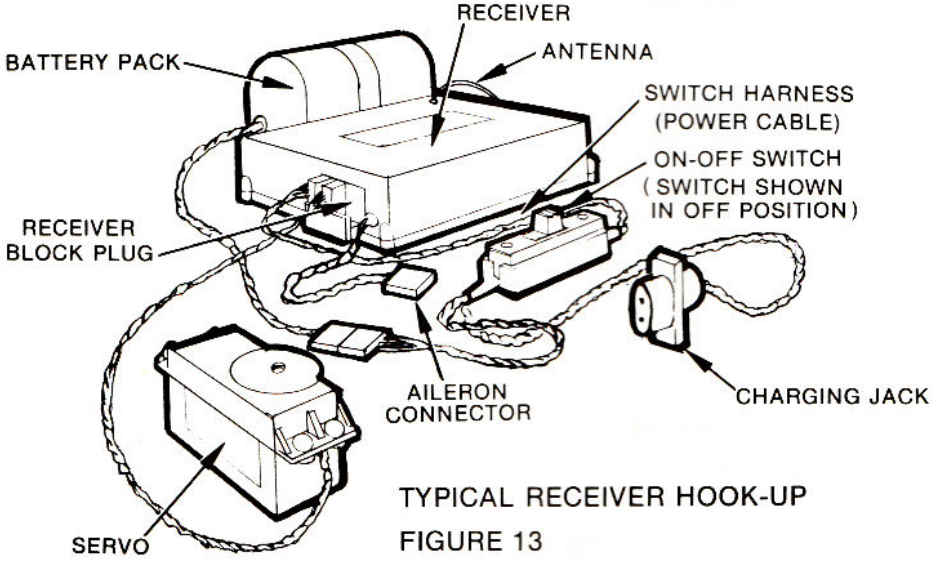

TYPICAL RECEIVER HOOK-UP

FIGURE 13

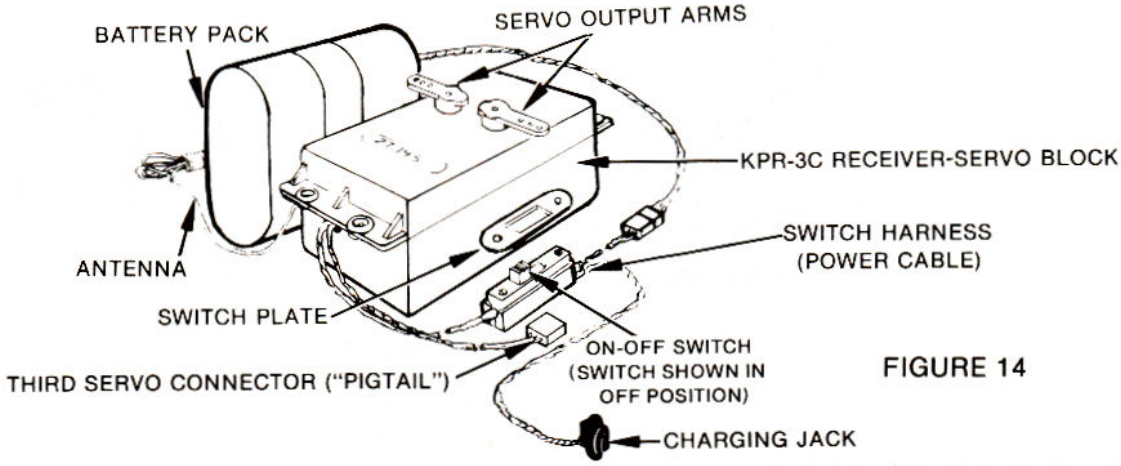

FIGURE 14

THREE CHANNEL AIRBORNE PACKAGE

KPR-3C RECEIVER

The receiver-servo block contains the electronics for the receiver, I.C. decoder, and two I.C. servo amplifiers integrated with two KPS-14-II servo gear train assemblies. The power cable contains an integral ON-OFF switch and charge receptacle that plugs into the cable from the battery pack. A pigtail cable for the addition of a third servo (not included with the system) is also provided. (Fig. 14).

Supplied with the system are two different kinds of output wheels and arms. Any combination of outputs can be used to achieve the desired amount of control throw for your particular application as long as care is used to prevent the two servo outputs from touching or interfering with each other.

USE ONLY THE 1-72 x 1/8" BINDER HEAD MACHINE SCREWS FURNISHED WHEN INSTALLING OUTPUT ARMS AND WHEELS. BE CAREFUL NOT TO CROSS THREAD THE SCREW OR THE THREADS IN THE CENTERING SHAFT MAY BE DAMAGED. If you feel any tension threading the screw, remove it and try another.

The KPR-3C receiver as shipped from the factory is wired to work with Mode II type transmitters. That is, the two servo mechanisms in the receiver will work off of the right hand stick of any Kraft two-stick transmitter.

To convert the KPR-3C receiver to work with Mode I transmitters, proceed as follows:

1. Remove the servo output arm or wheels from the servo mechanics.
2. Remove the 6 Phillips head machine screws from the bottom case.
3. Lift the case top aside exposing the gear train and electronics.
4. Reverse the two-pin plug as shown in Figure 15.
5. Put the case top back on, making sure that the antenna, switch harness and third channel pigtail wires are routed through their respective clearance notches and are not pinched between the top and bottom cases.
6. Install the 6 Phillips head machine screws and servo arms or wheels.

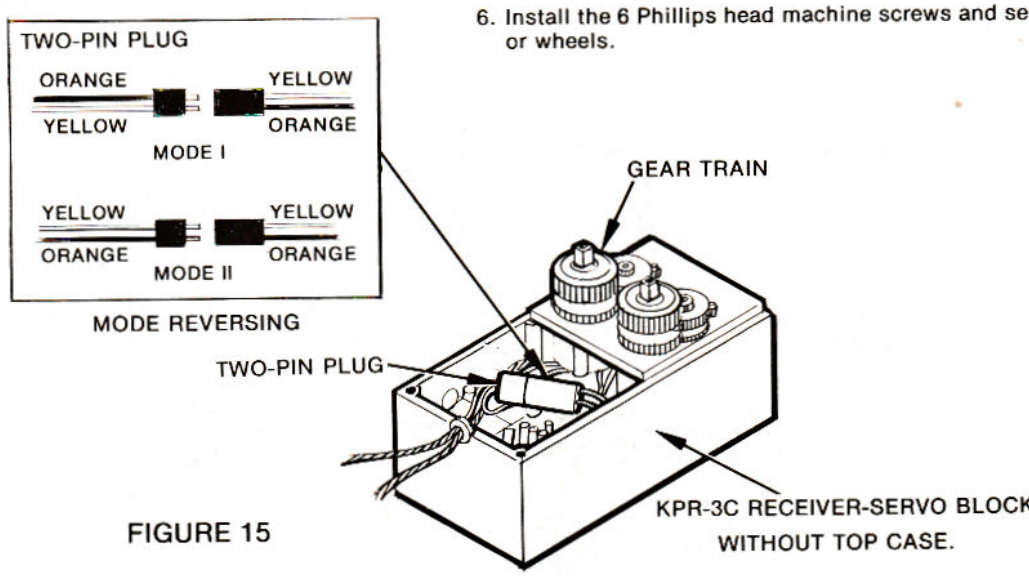

FIGURE 15

CHANGING KPR-3C TO WORK WITH MODE I TRANSMITTERS

SERVOS

All servos use an integrated circuit amplifier designed by Kraft Systems that incorporates a bridge type output.

For greater installation flexibility, servos are supplied to provide different direction of rotation for a given command. The difference in direction can easily be identified by the presence or lack of a small dot on the mounting flange furthest from the output wheel.

SERVO CENTERING INSTRUCTIONS

(KPS-11 and KPS-12 servos only)

The KPS-11 and KPS-12 servo mechanics feature a centering device which permits the neutral to be adjusted with the unit fully assembled. The centering shaft can be seen inside the output shaft. IT IS VERY IMPORTANT THAT THIS CENTERING SHAFT NOT BE MOVED WHEN INSTALLING OUTPUT ARMS AND WHEELS. If the servo shifts neutral due to over tightening or improper threading, it will be necessary to recenter the servo as follows:

Turn the transmitter and receiver on being sure the transmitter trims are at center position, plug the servo into a neutralizing channel, such as elevator, and remove the output wheel or arm from the servo output to be recentered. With a small screwdriver, carefully turn the centering shaft until the servo is again properly centered. The output wheel or arm may now be replaced.

AIRBORNE BATTERY PACKS

All receiver battery packs employ high rate heavy-duty cells. The capacity of these batteries is as follows:

KB-4E	550 MAH
KB-4S	450 MAH
KB-4M	450 MAH
KB-4F	1000 MAH

WARNING: Before the initial use of your completed model, charge the batteries using the KBC-B charger for at least 12 hours. Do not be concerned about over charging the batteries because the charger output has been adjusted to permit continuous charging without damaging the batteries.

After the initial 12-hour charge, the battery pack(s) should be recharged for at least 6 hours before each flying or use session REGARDLESS of whether the system has been operated since the last full charge. WHEN IN DOUBT, return to a 12-hour charge before flying or operating the model. REMEMBER, THE FAILURE TO FULLY CHARGE BATTERIES PRIOR TO EACH FLYING SESSION OR OPERATION OF THE MODEL MAY RESULT IN THE MODEL BECOMING UNREASONABLY DANGEROUS TO FLY OR OPERATE and thereby, the model may go out of control causing potential personal injury to others or to yourself as well as property damage. See Section 5, Item 3 of this Manual.

SWITCH HARNESS AND CHARGE RECEPTACLE

The switch harness uses a four-pole double throw, ball lock slide switch wired to Kraft connectors. The switch is in the OFF position when moved to the side where the connector goes to the receiver. (Fig. 16)

BATTERY VOLTAGE CHECK METER

(KPT-7C and KPT-7CS)

The transmitter battery voltage is automatically indicated everytime the transmitter switch is turned on.

To check receiver battery voltage, proceed as follows:

1. Be sure both transmitter and receiver switches are in the OFF position.
2. Insert unmarked plug of battery test cable (P/N 200-134) into switch harness charge receptacle. (Fig. 16)
3. Insert other end of battery test cable (identified by a short length of heat shrink tubing near the plug) into the transmitter receptacle located on the left hand corner of the transmitter bottom.
4. Receiver battery voltage is automatically indicated on the lower voltage scale of the transmitter meter.

NOTE: Battery voltage checking of both the transmitter and receiver are accomplished under designed in load. Normal operating voltages are 9.6 volts for the transmitter battery and

RECEIVER BATTERY TEST CIRCUITRY

FIGURE 16

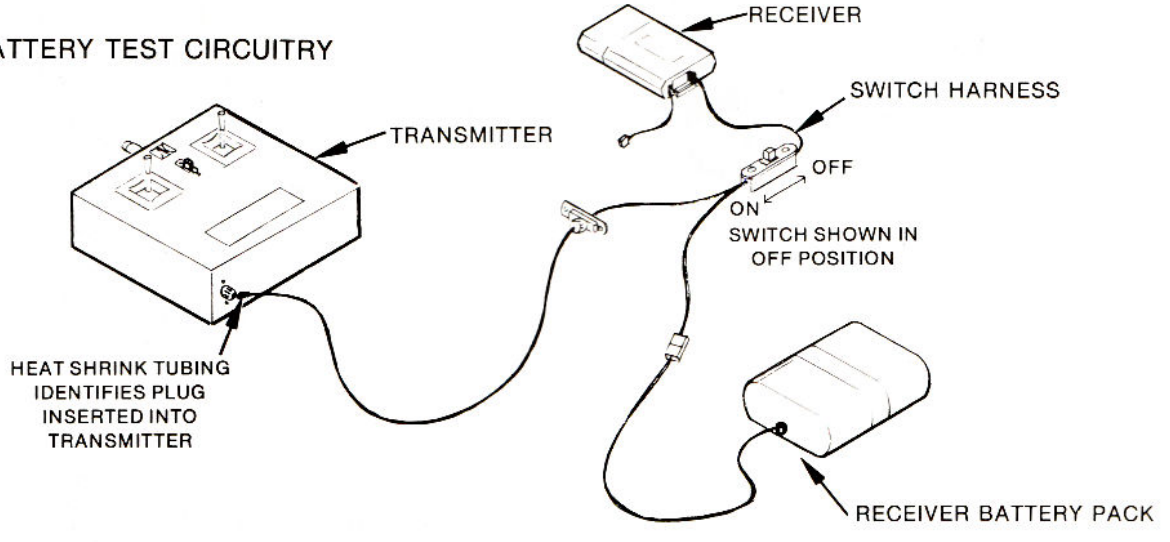

4.8 volts for the receiver. If voltage readings are lower than the normal operating voltage readings, do not use the system to operate a model.

WARNING: OPERATING THE SYSTEM WITH THE BATTERIES NOT FULLY CHARGED MAY RESULT IN THE MODEL BECOMING UNREASONABLY DANGEROUS TO FLY OR OPERATE AND THEREBY, THE MODEL MAY GO OUT OF CONTROL CAUSING POTENTIAL PERSONAL INJURY TO YOURSELF OR OTHERS, OR PROPERTY DAMAGE.

TRAINER SYSTEM

For trainer operation, transmitters need not be on the same frequency and may have 5 or 7 channels. Mode I is compatible only with another Mode I transmitter. Mode II is compatible with Mode II and also with single stick transmitters.

The receiver in the aircraft to be flown must be matched to the master or instructor's transmitter. The transmitter interconnect cable determines which transmitter is to be used as the master. The end of the interconnect cable marked with the black ring is plugged into the slave or student transmitter. Remove or retract and disengage the antenna on the slave transmitter. Both transmitters must be switched ON. When the master transmitter control toggle switch is held toward the front of the transmitter case, it transfers control to the slave transmitter. Releasing the toggle switch transfers control back to the master transmitter.

In flight, the aircraft should be trimmed for its neutral performance with the master transmitter. The trims on the slave transmitter should then be matched to the master transmitter to prevent the student from having to contend with an "out of trim" aircraft.

IT IS IMPERATIVE THAT ONLY AN EXPERIENCED PILOT HELP WITH THE TRAINING OF THE STUDENT ON A SLAVE TRANSMITTER.

The trainer transmitter interconnect cable is available from your dealer or the factory. (P/N 200-030)

DUAL FREQUENCY OPTION

(KP-3C only)

If your system was purchased with the dual frequency option, an extra transmitter plug-in frequency module will be supplied. The receiver will have an extra switch and harness installed similar to the ON-OFF switch. Frequency labels are affixed to the plastic switch cover showing in what position the switch must be to operate on either of the two frequencies.

To change frequencies, replace the transmitter frequency module. Refer to the section in this manual on "Changing Receiver R.F. Modules (KPT-3C and KPT-5C only)." The receiver frequency switch must be in the appropriate frequency position.

This option is not available on 75.640 MHz, 27.045 MHz, or on the 53 MHz frequencies.

NOTE: Be sure to change the transmitter frequency flags to the correct operating frequency.

DIRECT SERVO CONTROLLER

(Optional)

The KPR-5C, KPR-7C, and KPR-7CD receiver switch harnesses have a special charge receptacle that permits plug in of the Direct Servo Controller. The slide switch on the controller allows it to be used either as a Mode I or Mode II transmitter. The lever will operate the throttle or elevator depending on the position of the slide switch. The toggle switch will operate the fifth channel or retractable landing gears.

It is hazardous and inconvenient for modelers at most flying sites to attempt engine adjustments while others are flying. The Direct Servo Controller enables the modeler to operate the desired control functions without interfering with others. Since the receiver need not be switched on when using the director servo controller, the user will not be interfered with by nearby transmitters.