INSTRUCTIONS FOR OPERATING

CITIZEN-SHIP MODEL RER "27" RECEIVER

CITIZEN-SHIP RADIO CORPORATION
820 EAST 64th STREET
INDIANAPOLIS, INDIANA

INDEX FOR MODEL RER RECEIVER INSTRUCTIONS.

INSTRUCTIONS FOR USE OF CITIZEN-SHIP

MODEL RER RECEIVER

Your CITIZEN-SHIP RER Receiver is a two channel 27.255mc superregenerative receiver designed to receive a tone modulated signal from the CITIZEN-SHIP REX transmitter and sort out, or separate, the tones so a low tone (240 cycles) closes one relay and a high tone (1200 cycles) closes the other relay. (Discussion of a third tone for simultaneous operation is included in the appendix for the advanced experimenter.)

Thus, operation of Rudder (R) and Elevator (E) are completely separate functions. Motor speed may be added by the simple expedient of adding CITIZEN-SHIP MSC Motor Speed Control on either of the two channels. Recommendation of actuators for various functions is discussed under operating (Par. 8). In the case of boats, steering and speed functions can be completely separate and independent of each other. (See Appendix 2.)

All this is accomplished with resistance capacity filter circuits using no iron core chokes or transformers, thus greatly reducing weight and cost.

(1) The CITIZEN-SHIP RER receiver is shipped completely finished, wired, and tested and ready to be installed in a plane. The only adjustment is a tuning core in the coil visible through the top plate and identified as C in Figure 1. Tuning is described in Paragraph 7.

(2) (a) A decision should be made now concerning means of wiring the set to the batteries. Connections are shown in detail in Figure 3. All the accessories may be obtained from an electronic or radio jobber or supply store, but they are conveniently packaged in an installation kit Model #IRE for your convenience. (Price $4.95.)

(b) The kit consists of the following:
(1) Plug and socket with rubber shield.
(2) 500,000 ohm potentiometer.
(3) 2 pole switch.
(4) Open circuit phone jack.
(5) Plug for phones.
(6) Piece of cable same as on receiver.

The plug and socket may be omitted and the set wired in directly, but the plug is a convenience for removing the set to test tubes or for any other reason.

(3) Mounting is recommended to be on sponge rubber and the overhang on front and rear provides a surface to glue to rubber (Figure 2). Or the box may be mounted to the bottom of the fuselage with rubber below and in front as shown in the dotted lines.

(4) By virtue of the spade bolts in the box when the box only is cemented in, the set may be removed simply by taking off the two nuts (N, Figure 2), and lifting it out of the box. The box is for protection and mounting only and does not affect the operation.

(5) Battery voltages required are:
"A" or filament ------ 1-1/2 Volts.
"B" or plate---------- 67-1/2 Volts.
"C" bias---------- 15 Volts.
Limiter Bias--------- 1-1/2 Volts.

(a) "A" batteries should be 4 pencells in parallel (All plus terminals wired together and all minus terminals wired together) although two will last for a half hour or more. (Two, of intermediate size, in parallel may also be used.) The total filament current is 190 M.A.

(b) "B" battery should be 67-1/2 Volt Burgess type 45 or Eveready type 457 or equivalent. Also 3-22-1/2 Burgess type U15 or Eveready type 412 may be used. Burgess Y15 or Eveready 505 are too small and not recommended.

(c) The "B" idling current with no signal is 1 M.A. and rises to 6 M.A. with signal. (Relay current changes from 0 to 5 M.A. assuring reliable operation.)

(d) "C" battery is a Burgess type Y10 or Eveready type 504 which weighs 3/5 ounce, and the selection of tubes and design of the circuit was carefully chosen to permit the use of this standard available unit. No current drawn from this battery except as described in Paragraph 6b on wiring. Be sure this battery is fresh and measures 15 Volts.

(e) The limiter bias is a 1-1/2 volt pen cell of any size as no power is drawn from it.

(6) The wiring diagram is shown in Figure 3 with colors of leads identified.

(a) Also a recommended arrangement of leads for plug and socket are shown. Our test fixtures will be wired for this arrangement of leads in case the set is sent in for service with plug attached. It should be obvious that the socket has same wiring arrangement as plug. (The unused brown wire in the cable may be used to connect to the back contact of either relay if a Servo is used. If two Servos are used an additional lead will be needed.)

(b) Because all currents - filament, plate, and actuator - pass through the ground lead, a separate heavier wire is provided for common or ground and is attached to a solder lug under one of the nuts N. See Figure 1. Make sure this nut will not vibrate loose. An extra lock nut is supplied.

(c) Note Figure 3 shows a dotted line from black wire for limiter bias to white wire for + A. These may be connected together and limiter bias battery omitted permitting "A" batteries to supply bias, but this arrangement requires that "A" batteries be changed when they drop to 1.25 Volts.

(d) When the 500,000 ohm potentiometer is installed with new batteries the slider to which the green wire is fastened must be turned to the end toward the contact to which -C is connected. This gives full C bias.

(e) The 500,000 ohm potentiometer may be omitted and the green lead connected directly to -C, but maximum life cannot be obtained from the "B" battery, (See Par. 9), and some tubes may require slightly less than 15 Volts (See Par. 10). The switch shown in this circuit is to prevent drain on C battery when set is not in use. + B need not be opened.

(f) Note that phone jack is open circuit type (must not short out when head phones are removed).

(g) The voltages of the actuator or escapement batteries should be those recommended by the manufacturers. In case of the CITIZEN-SHIP escapement this is 3 Volts.

(h) The brown antenna lead is separate from the cable and should be connected to the antenna mounted externally on the aeroplane or boat. Length is not critical and should be approximately 18".

(7) (a) After the set has been connected to the batteries and actuators installed (See Par. 8 before installation), turn set on and plug in a pair of headphones. (If the relays start closing spontaneously, read Par. 7e first.) A typical superregen hiss should be heard. Turn on the power switch of your REX transmitter (after batteries are installed, of course), and if receiver is in tune, hiss should vanish. If not, use an all insulated screwdriver (one can be made from a 1/8" wooden dowel by making a wedge on one end) and turn core for silence.

(b) Next remove antenna completely from REX transmitter and bring close to set. Push up Hi tone button and tune core in receiver for maximum audible 1200 cycle signal. This is the only adjustment required. Be sure this core is not loose and will not rotate from vibration when the engine is running. Lightly cement if necessary.

(c) Put back the transmitter antenna. Because of extreme sensitivity of receiver and high output of transmitter, the receiver may overload close by, so it may be necessary to remove transmitter 10 to 20 feet to get reliable operation. Holding hand on antenna will permit close operation. (Overload is manifested by no operation or sluggish response of relays.) Pushing the Hi tone button will operate its respective relay and Low tone the other relay and of course in turn operate respective escapement wired to each relay. The range at which this operation is reliable is considerably farther than a plane can be judged as to flight altitude.

(d) Please note the two 470 ohm resistors mounted on the left side of the relay panel with the leads curled into a loop. These are provided for attaching a low range voltmeter (the 1-1/2 volt or 6 volt scale on a CITIZEN-SHIP meter is ideal) to check the operation of the plate current change through each relay. If a relay fails to operate or sticks down, this allows you to check if the proper current change is occurring.

With the CITIZEN-SHIP meter, the 1-1/2 Volt scale should read full scale, and with the 6 Volt scale approximately 2 Volts.

(e) If the relays start closing spontaneously and intermittently without a signal from the transmitter, it is a sign that the "C" battery is weak (even though new), or the potentiometer is turned back (turning the potentiometer back toward the ground end will lock both relays in). Turning on the transmitter carrier generally stops this intermittent operation, but DO NOT FLY with this condition. At long distances

the carrier will not suppress this action. Get a new "C" battery or add pen cells to bring it up to 15 Volts.

(f) A simple way to set the potentiometer is to put a voltmeter across the 470 ohm resistors and adjust the potentiometer so the meter just starts to move off zero.

(8) Choice of Actuators:

(a) It will be observed that the Hi tone relay is practically instantaneous whereas the Low tone relay has a slight delay. This must be taken into account in making a choice of actuators.

(b) In a small ship our preference was to use a PSN on the rudder and use the Low tone relay. The delay was of no consequence. We used an SE on the elevator with the first push giving Up elevator and two pushes giving Down and used the Hi tone relay for this. (The low tone relay would not be fast enough to catch the second push). If motor speed was desired our MSC system could be added to this elevator control. Since it operates on a fast "beep" the plane would scarcely react to the elevator going through this cycle.

(c) On a bigger plane or where an SE selective escapement is desired on the rudder the Hi tone is used for this actuator and the MSC motor control added here. This requires that a Motor Servo be used on the elevator, either because of the bigger control surface or because the Servos are slower in action than escapements and here again the first push should be Up elevator and the second push Down. Because of the slower response of Servos the second push will have time to catch down elevator. (All these combinations have been tried and flight tested.)

(d) Many other combinations may occur to the modeler, but always give consideration to the delay inherent on the low tone.

(e) See Appendix 2 for boats.

(9) Battery Voltage Limits:

(a) In order to produce such a light and inexpensive dual channel receiver a slight limitation resulted on "B" battery voltage range. With 15 Volts "C" bias, the set will operate satisfactorily from 67-1/2 Volts down to 60 Volts. Since there is a lot of life left in a "B" battery below 60 Volts the potentiometer P is wired across the "C" battery so this bias can be reduced as the "B" battery loses voltage.

(b) The Hi tone relay will most likely be the first to become inoperative with low "B" voltage. If this occurs turn back the potentiometer (away from the -C end) until the Hi tone relay again operates satisfactorily. Turning too far will make the low tone operate the Hi tone relay. Check this carefully so it does not occur. Normal operation can be obtained as low as 45 Volts "B" but is unreliable and not recommended.

(c) "A" batteries should be replaced at 1.1 Volts.

(d) Intermittent relay operation as explained in Par. 7e or simultaneous operation of both relays with either low or hi (not intermediate) tone will indicate the end life of the "C" battery with fresh 67-1/2 Volt "B" batteries. (This can occur with a new "C" battery which has gone dead by shelf life.)

(10) Tubes:

(a) The selective operation of this set is not only a function of voltage ratios, "C" battery versus "B" battery, but also the cutoff point of the 3S4 tubes. This is a characteristic not guaranteed by the manufacturer, but tubes of one manufacturer are relatively uniform. It is suggested that tubes of different manufacturers not be mixed. If a tube fails to function, turn back the potentiometer to lower the bias.

(b) In replacing burned out or old 3S4 tubes, try them in both sockets for most reliable operation.

(c) The circuit diagram of the receiver is shown in Figure 4 and it will be noted that only one half of the filament is used on the 3S4 tubes. This is done for two reasons: (1) to save 100 M. A.of filament drain, and (2) to limit the plate current change. With both sides of the filament wired in, the plate current change through the relays would be 11 M.A. which would saturate the relays.

(d) Also note that opposite sides of the filament are used in the two 3S4 tubes so if a tube is burned out or becomes weak simply interchanging tubes gives use of a new filament. In swapping tubes consider limitations of tubes mentioned in 10 above.

Appendix 1

Although the wiring, building and testing of this set was considered beyond the skill of the average modeler, some advanced modelers may wish to experiment and there is a possibility of obtaining simultaneous operation of rudder and elevator by certain modifications and careful tube selection.

This type of operation is too critical for production building and would have resulted in virtual custom built receivers at greatly increased cost.

(Please note that the following modifications and changes are made at the modelers risk and VOIDS the guarantee).

For the uninformed modeler simultaneous operation means that the Lo tone, for instance, may be on and holding the rudder right or left, and that simultaneously pushing the Hi tone button on the transmitter will operate the Hi tone relay without affecting the Low tone or vice versa.

This is accomplished by an intermediate tone being sent by the transmitter when both Hi and Low tone buttons are pushed. This intermediate tone, about 500 cycles, can be heard orally by tuning in the REX on a Ham receiver or even through the phones plugged into the RER Receiver.

The adjustments of the receivers and transmitters as shipped do not guarantee this type of operation, but many sets may give simultaneous operation as received.

Referring to the circuit diagram (Figure 4) note the 270 MM ceramic capacitor (circled). This capacitor limits the low tone and possibly the intermediate tone from operating the Hi relay. By increasing this capacitor it MAY BE POSSIBLE to have the intermediate tone operate both relays and the Low tone pull in the Hi relay. Selection of tubes and adjustment of "C" and "B" voltages will have a determining influence.

You may try it if you wish. We take no responsibility for the results.

Appendix 2

For use in boats one tone may be used to steer the boat and the other to operate the motor.

In steering, the rudder may be moved by either a PSN or SE escapement, a motor servo or any motor arranged to give back and forth motion of the rudder.

The motor for driving the screw can be made to start, stop, reverse, or run slowly by connecting through an auxiliary stepping relay or actuator switch which will give these various functions.

This is the part of the hobby where we feel the experimenter wants to use his own ingenuity. Let's hear your solutions.

WARRANTY

Your CITIZEN-SHIP Model RER Receiver is warranted by the manufacturer to be free from defects in material and workmanship. However, the tubes will not be replaced because of an open filament as factory testing of the sets before shipment indicates the set to be in good operating condition before shipment is made.

Any receiver failing to operate within thirty days after date of purchase will be repaired or replaced free of charge upon being returned to the factory. This warranty does not apply to failure or operation due to exhausted or improper batteries.

If your receiver is damaged in shipment, you should file a claim with the carrier immediately upon noting the damage.

This warranty does not apply if, in our judgement, the receiver has been tampered with or received abusive treatment beyond that encountered in normal usage.

WARNING: Open plus B circuit when set is stored for a long period of time - particularly if in dampness.

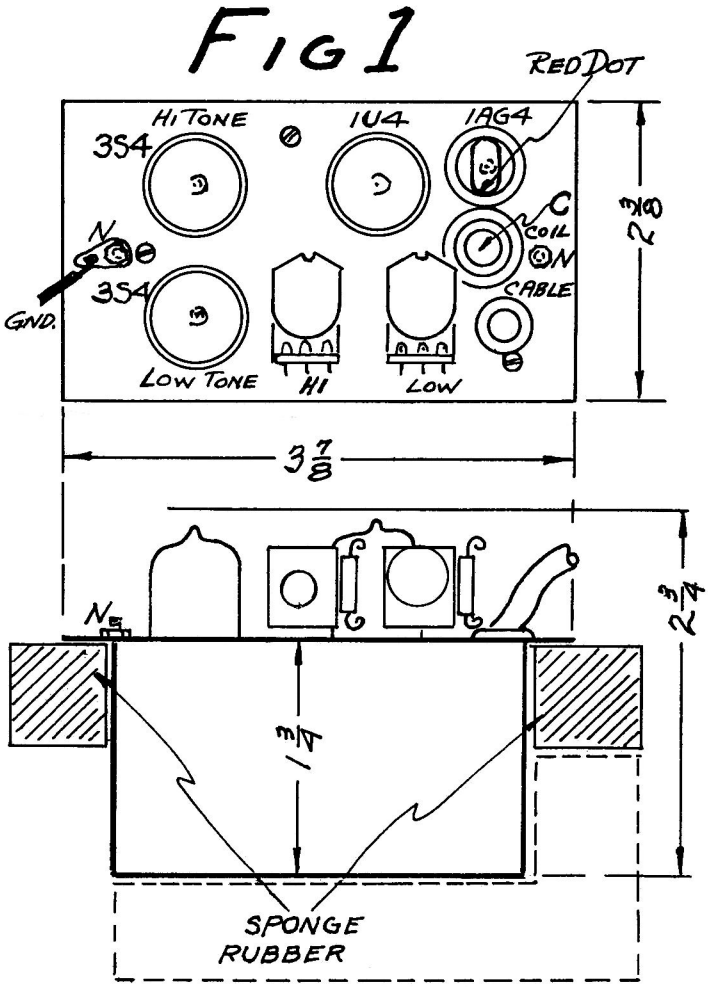
FIG 1
RED DOT
HI TONE
3S4
1U4
1AG4
C
COIL
N
CABLE
N
3S4
GND.
LOW TONE
HI
LOW
2 3/8
3 7/8
N
2 3/4
1 3/4
SPONGE RUBBER
FIG 2

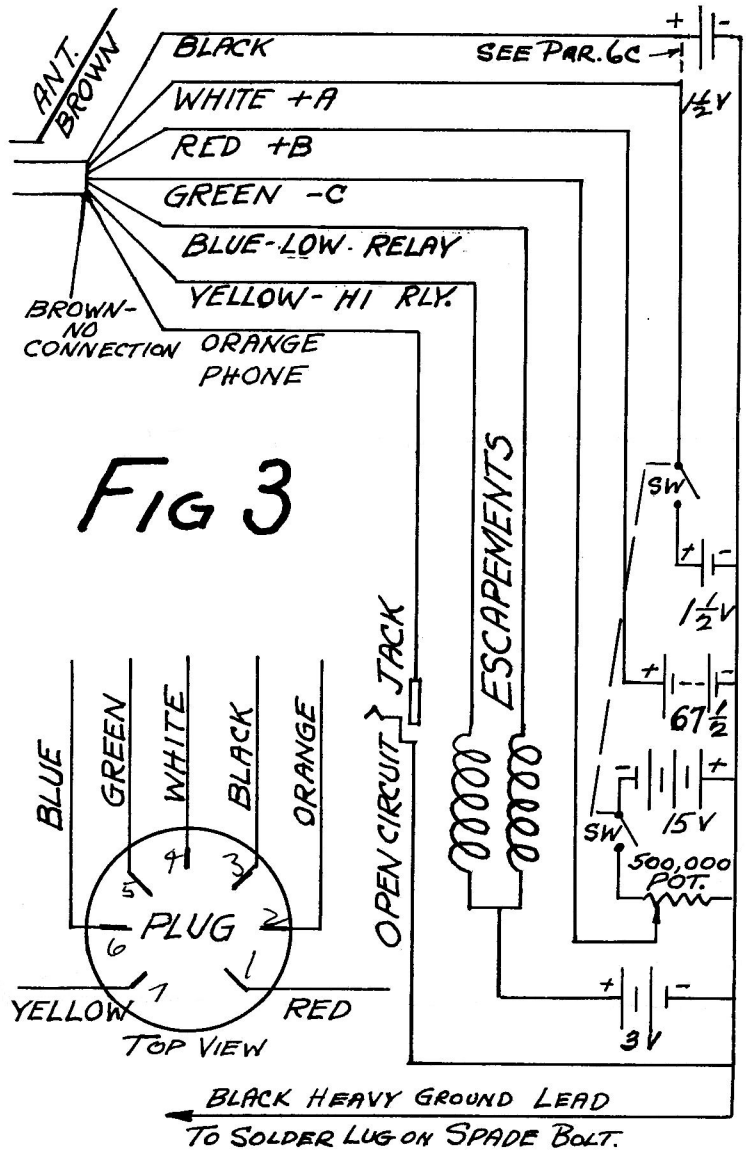
ANT. BROWN
BLACK
SEE PAR. 6C
WHITE +A
RED +B
GREEN -C
BLUE-LOW-RELAY
YELLOW-HI RLY.
BROWN-NO CONNECTION
ORANGE PHONE
1 1/2 V
FIG 3
SW
1 1/2 V
67 1/2
15 V
SW
500,000 POT.
3 V
JACK
ESCAPEMENTS
OPEN CIRCUIT
BLUE
GREEN
WHITE
BLACK
ORANGE
PLUG
YELLOW
RED
TOP VIEW
BLACK HEAVY GROUND LEAD
TO SOLDER LUG ON SPADE BOLT.

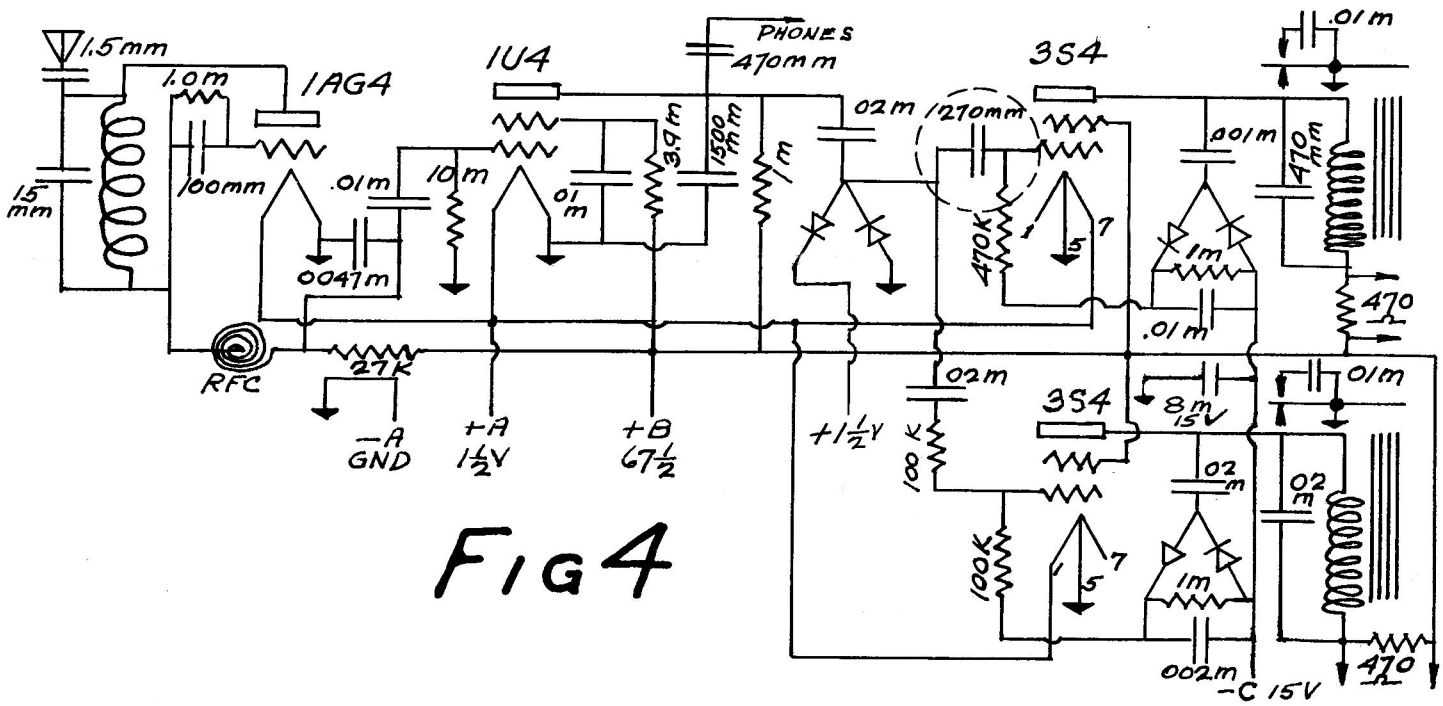
1.5 mm
1.0 m
1AG4
1U4
PHONES
470 mm
3S4
.01 m
15 mm
100 mm
.01 m
10 m
.01 m
3.9 m
1500 mm
1 m
.02 m
1270 mm
470 K
.01 m
470 mm
1 m
.01 m
470 Ω
.0047 m
RFC
27 K
-A GND
+A 1 1/2 V
+B 67 1/2
+1 1/2 V
.02 m
100 K
3S4
8 m 15 V
.01 m
.02 m
100 K
1 m
.02 m
.02 m
.002 m
-C 15 V
470 Ω
FIG 4